# 3.7V Lithium Polymer Battery Data Sheet

Model:  355065

Please Find More:

https://www.fpbattery.com/3-7v-1100mah-lithium-polymer-battery/

File Number:  A/FP5065-8521

File Version: 01


CONTACT

CUSTOMER SERVICE
86.755.3682.7358
sales@fpbattery.com
Hours of Operation:
9:00am-6:00pm CST, Monday to Friday

LEARN MORE ON:
https://www.fpbattery.com/

DNK POWER COMPANY LIMITED

## BATTERY SPECIFICATION

| | |
|---|---|
| Part Number | DNK 355065 |
| Nominal Voltage | 3.7 V |
| Nominal Capacity | 1100 mAh |
| Internal Impedence | <60mΩ |
| Charge Voltage | 4.2V |
| Recommended Charge Current | 0.2 C |
| Allowed Max Charge Current | 0.5 C |
| Output Voltage Range | 4.2 - 2.5 V |
| Recommended Discharge Current | 0.2 C |
| Max Continuous Discharge Current | 1 C |
| Pulse Discharge Current | 3 C (10 mS) |
| Discharge Cut-off Voltage | 2.5± 0.05V |
| Cycle Life to 80% Health | 500 (0.2C, 25°C) |

1

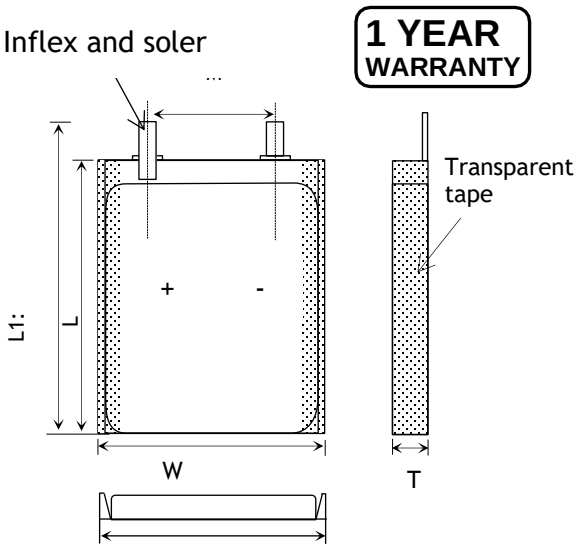


| Item | Parameter (mm) |
|---|---|
| T | 3 |
| W | 50 |
| M | 10 |
| L | 65 |
| $L_1$ | 67 |
| BL | 67 ± 1 |
| CL | 100 |

## ENVIRONMENTAL SPECIFICATIONS

| | |
|---|---|
| Charging Temperature Range | 0 - 45°C |
| Discharging Temperature Range | -20 - 60°C |
| Storage Period 1 Week | -20 - 45°C |
| Storage Period 1 Month | -10 - 45°C |
| Storage Period 6 Months | 0 - 35°C |

## BATTERY PROTECTION

| | |
|---|---|
| Over Charge | 4.275 ± 50mV |
| Over Discharge | 2.5V ± 50mV |
| Over Current | 3A to 5A |
| Short Circuit | Yes |

## MECHANICAL SPECIFICATIONS

| | |
|---|---|
| Dimensions | 67x 50 x 3 mm(L*W*T) |
| Weight | 18 g |
| Battery Terminals | WC/ FL * |

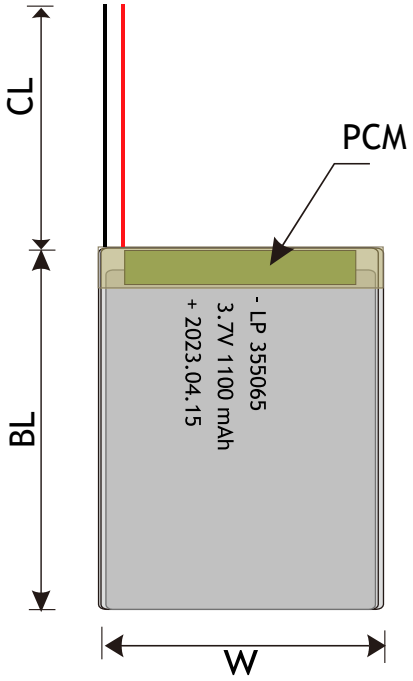


## CERTIFICATION

| | |
|---|---|
| Certification Approval | PLEASE CONSULT SALES |

* WC=With Connector FL=Flying Leads UWP=Blue Wrapped PVC
BWP=Black Wrapped PVC BC= Bare Cell

# RELATIVE CURVES

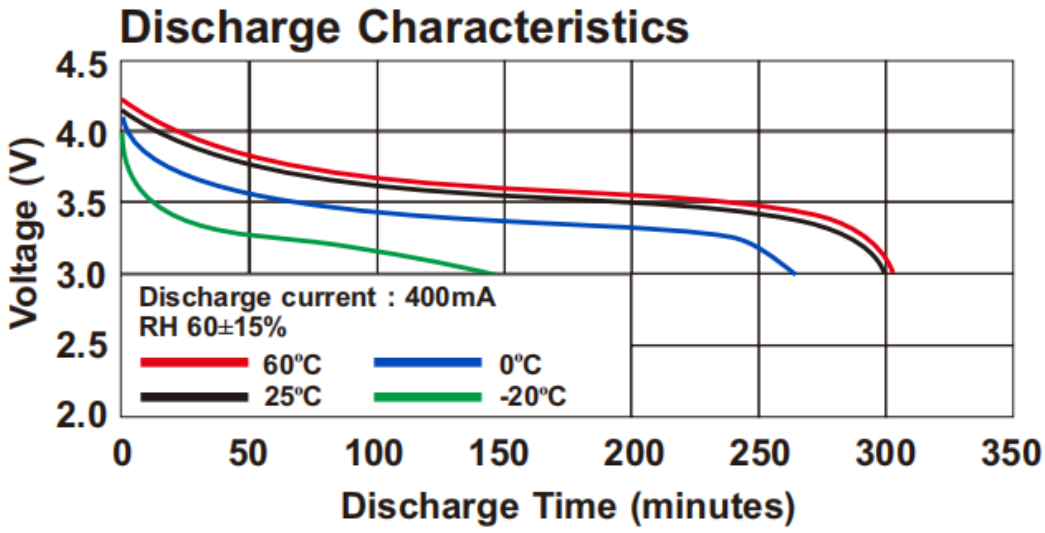


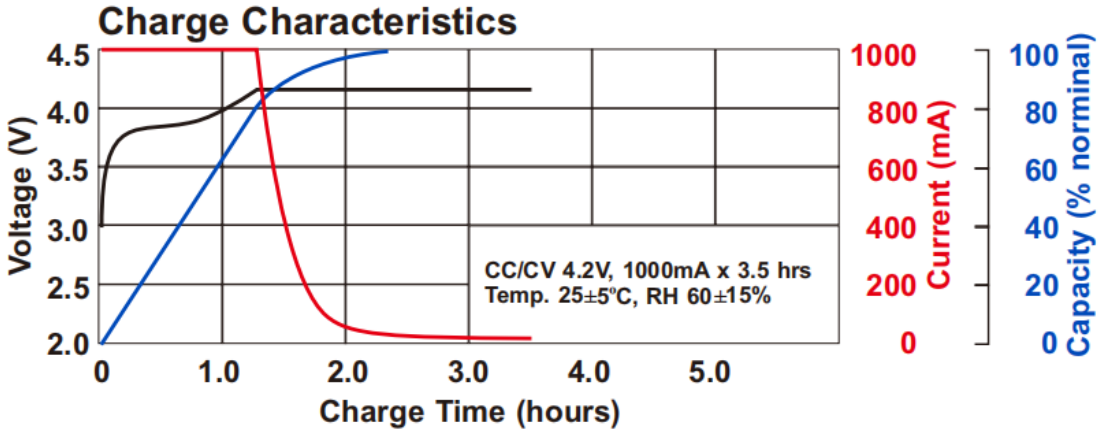


# ANNOUNCEMENT

- Pay attention to the positive and negative connections of the battery to ensure proper connection.
- Over-charging LiPo batteries will damage them and possibly cause a fire. (above 4.20V per cell is considered overcharged).
- Always charge the battery in an isolated safe area away from any flammable/combustible materials. Never charge a LiPo battery on a wooden workbench, inside an automobile,or on any flammable surface. Charge LiPo batteries on a concrete surface where there are no flammable objects within 10 feet (3 meters) of the charging area. Always charge your LiPo battery in a fireproof container.
- Do not charge the battery without supervision.
- NEVER charge a Li-ion or LiPo battery overnight and unattended.
- ALWAYS use the charging cord supplied with the device (or only use a replacement charging cord that is specified by the device manufacturer to bean approved alternative).
- Do not allow the battery to be fully discharged and recharge it promptly to prolong battery life.
- The battery must be discharged at less than the maximum discharge current specified in the battery instruction manual. High discharging current may reduce the discharging capacity significantly or cause over-heat.
- Always remove your LiPo battery from your model while charging. Remove the battery from you model and allow it to cool to ambient temperature before re-charging.
- Dispose of defective Lipos in accordance with local ordinances and in a safe manner.
- Charge at correct rate and proper voltage for either use or storage.