3.7V Lithium Polymer Battery Data Sheet

Model: 355059

Please Find More:

https://www.fpbattery.com/3-7v-1000mah-lithium-polymer-battery/

File Number: A/FP5059-5924

File Version: 01

CONTACT

CUSTOMER SERVICE
86.755.3682.7358
sales@fpbattery.com
Hours of Operation:
9:00am-6:00pm CST, Monday to Friday

LEARN MORE ON:
https://www.fpbattery.com/

DNK POWER COMPANY LIMITED

BATTERY SPECIFICATION

Part Number	DNK 355059
Nominal Voltage	3.7 V
Nominal Capacity	1030 mAh
Internal Impedence	<60mΩ
Charge Voltage	4.2V
Recommended Charge Current	0.2 C
Allowed Max Charge Current	0.5 C
Output Voltage Range	4.2 - 2.5 V
Recommended Discharge Current	0.2 C
Max Continuous Discharge Current	1 C
Pulse Discharge Current	3 C (10 mS)
Discharge Cut-off Voltage	2.5± 0.05V
Cycle Life to 80% Health	500 (0.2C, 25°C)

1

1 YEAR WARRANTY

Inflex and soler

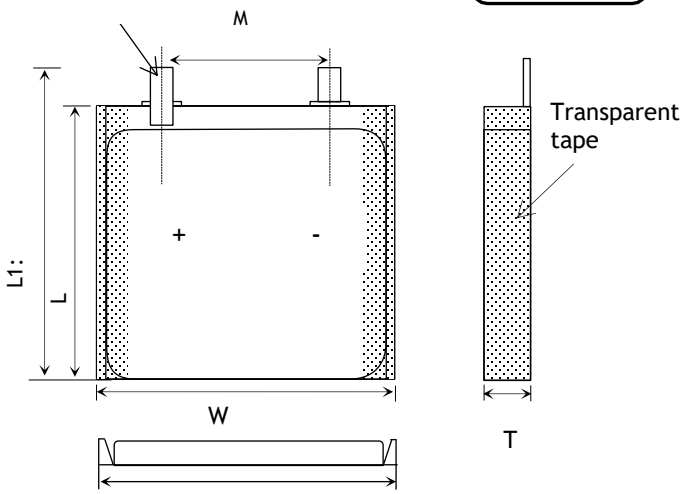

Item	Parameter (mm)
T	3
W	50
M	10
L	59
L_1	61
BL	61 ± 1
CL	100

ENVIRONMENTAL SPECIFICATIONS

Charging Temperature Range	0 - 45°C
Discharging Temperature Range	-20 - 60°C
Storage Period 1 Week	-20 - 45°C
Storage Period 1 Month	-10 - 45°C
Storage Period 6 Months	0 - 35°C

BATTERY PROTECTION

Over Charge	4.275 ± 50mV
Over Discharge	2.5V ± 50mV
Over Current	3A to 5A
Short Circuit	Yes

MECHANICAL SPECIFICATIONS

Dimensions	61x 50 x 3 mm(L*W*T)
Weight	Around 17 g
Battery Terminals	WC/ FL *

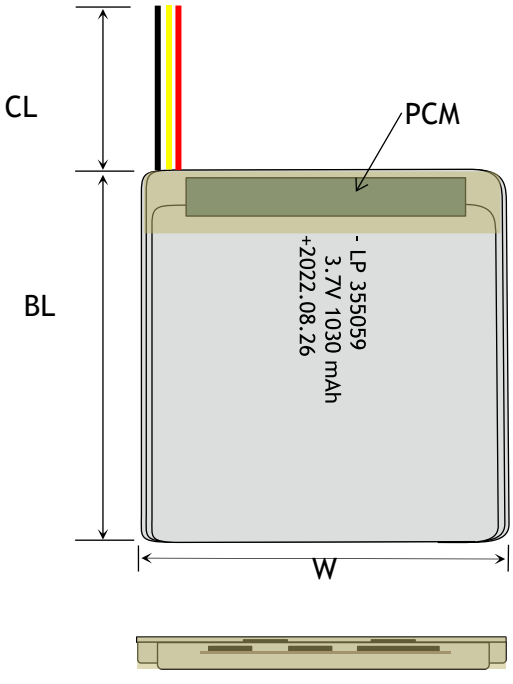

CERTIFICATION

Certification Approval	PLEASE CONSULT SALES

* aWC=With Connector FL=Flying Leads UWP=Blue Wrapped PVC
BWP=Black Wrapped PVC BC= Bare Cell

BULK PRODUCTION ACTUAL PICTURES



BARE CELL (BC)



FLYING LEADS (FL)



WITH CONNECTOR (WC)



BLUE WRAPPED PVC (UWP)



BLACK WRAPPED PVC (BWP)

3.7V LIPO BATTERY OPTIONS



Special Ingredients to make batteries work from -40 -85 ° C



Discharging Current up to 100C



Popular JST,Molex,Hirose,Anderson available



LED Power Indicator



Power Button



Upgrade to LifePo4 tech and life circle up to 1500

RELATIVE CURVES

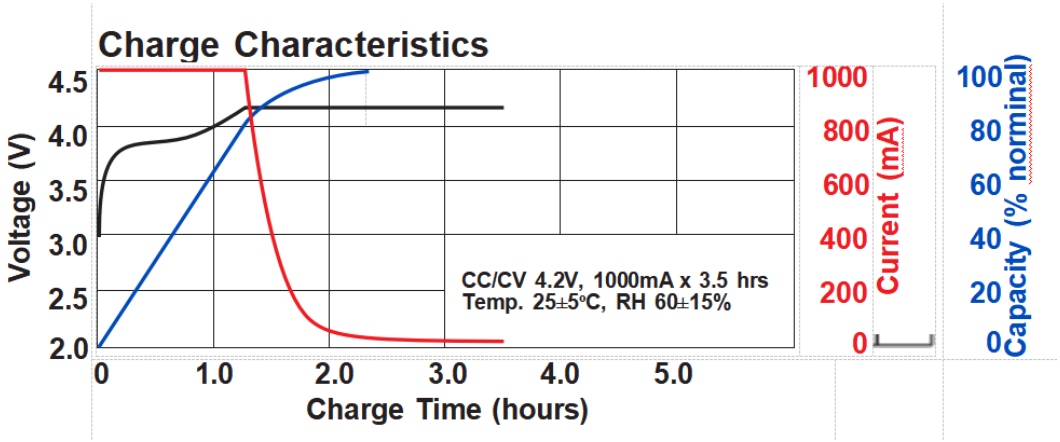

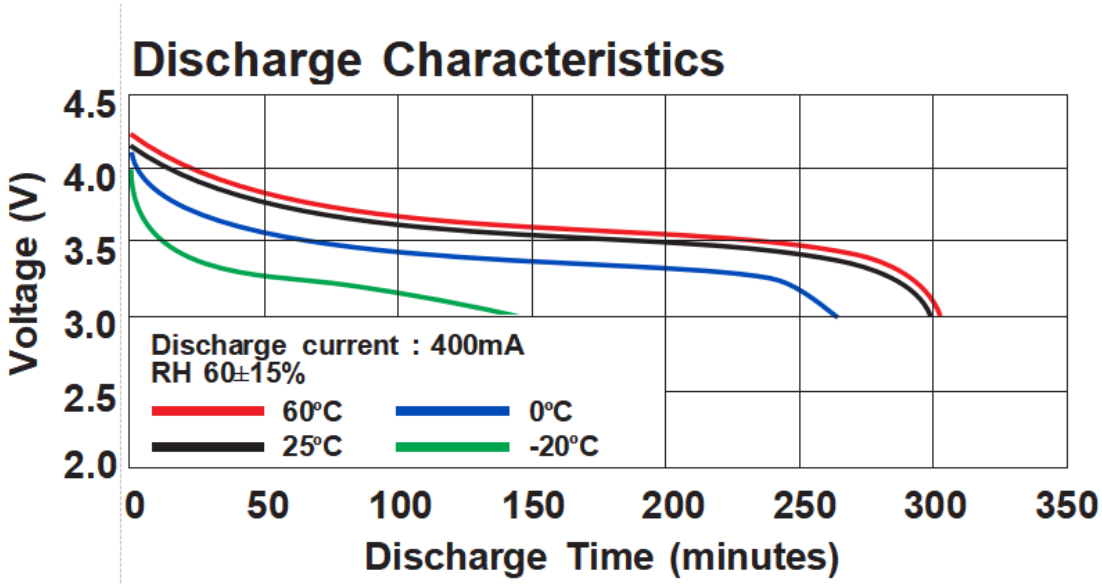

ANNOUNCEMENT

- Do not carry LiPo batteries in your pocket. They have been known to short against coins and keys and cause fires.
- Use lithium battery safety bags/containers during charging.
- Avoid short-circuiting the battery. Though short-circuiting for short time will not damage the battery, doing so for a long time will damage the battery and may overheat the battery causing burns, fire or explosion.
- Do not allow charging to continue above 4.20V per cell. This is VERY important as a fire could result.
- It is essential to observe the polarity. Reverse polarity (POSITIVE and NEGATIVE) will damage the cells, cause the battery to swell and can damage your charger.
- Obtain sand. Use in bottom of isolation containers and as a smothering agent in case of fire.
- Never burn, overheat, disassemble, short-circuit, solder, puncture, crush or otherwise mutilate battery packs or cells.
- Store behind a fire door and where a fire alarm is situated.
- Do not allow children to touch the battery, especially untrained children.
- For best practice store standard lipo batteries at 3.80 volts +/.05 volts per cell. Or at the manufacturer's suggested storage voltage for non standard chemistry's
- When not using your LiPo/Li-ion battery pack, store it at 60-70% of the pack’s rated capacity. Lithium-ion cells should never be stored fully charged, it is suggested to store them with a voltage around 3.8V. Most of the chargers have a “storage mode” that will either charge or discharge the cell to the proper storage voltage. Experts recommend to put the cells in storage mode after every run, this will help the battery to lengthen the usable life

span