3.7V Lithium Polymer Battery Data Sheet

Model: 3549109

Please Find More:

https://www.fpbattery.com/3-7v-5500mah-lithium-polymer-battery/

File Number: A/FP49109-20644

File Version: 01

CONTACT

CUSTOMER SERVICE
86.755.3682.7358
sales@fpbattery.com
Hours of Operation:
9:00am-6:00pm CST, Monday to Friday

LEARN MORE ON:
https://www.fpbattery.com/

DNK POWER COMPANY LIMITED

BATTERY SPECIFICATION

Part Number	DNK 3549109
Nominal Voltage	3.7 V
Nominal Capacity	1900 mAh
Internal Impedence	<60mΩ
Charge Voltage	4.2V
Recommended Charge Current	0.2 C
Allowed Max Charge Current	0.5 C
Output Voltage Range	4.2 - 2.5 V
Recommended Discharge Current	0.2 C
Max Continuous Discharge Current	1 C
Pulse Discharge Current	3 C (10 mS)
Discharge Cut-off Voltage	2.5± 0.05V
Cycle Life to 80% Health	500 (0.2C, 25°C)

1

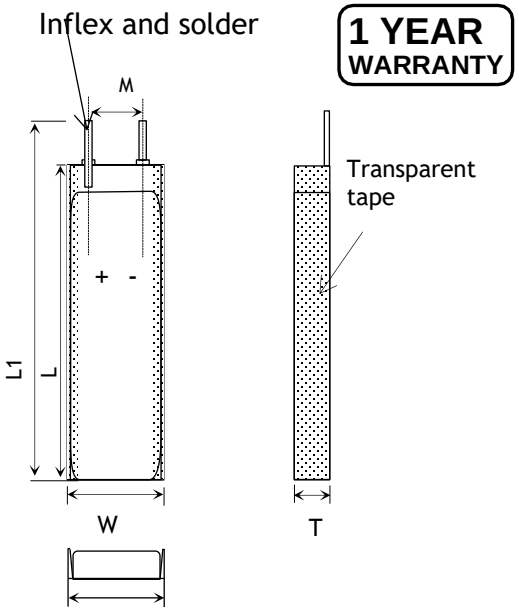

Item	Parameter (mm)
T	3
W	49
M	10
L	109
L_1	111
BL	111 ± 1
CL	100

ENVIRONMENTAL SPECIFICATIONS

Charging Temperature Range	0 - 45°C
Discharging Temperature Range	-20 - 60°C
Storage Period 1 Week	-20 - 45°C
Storage Period 1 Month	-10 - 45°C
Storage Period 6 Months	0 - 35°C

BATTERY PROTECTION

Over Charge	4.275 ± 50mV
Over Discharge	2.5V ± 50mV
Over Current	3A to 5A
Short Circuit	Yes

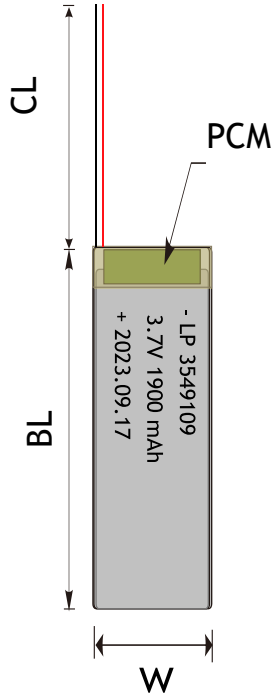

MECHANICAL SPECIFICATIONS

Dimensions	111x 49 x 3 mm(L*W*T)
Weight	31 g
Battery Terminals	WC/ FL *

CERTIFICATION

Certification Approval	PLEASE CONSULT SALES

* WC=With Connector FL=Flying Leads UWP=Blue Wrapped PVC BWP=Black Wrapped PVC BC= Bare Cell

BULK PRODUCTION ACTUAL PICTURES



BARE CELL (BC)



FLYING LEADS (FL)



WITH CONNECTOR (WC)



BLUE WRAPPED PVC (UWP)



BLACK WRAPPED PVC (BWP)

3.7V LIPO BATTERY OPTIONS

Special Ingredients to make batteries work from -40 -85 ° C

Discharging Current up to 100C

Popular JST,Molex,Hirose,Anderson available

LED Power Indicator

Power Button

Upgrade to LifePo4 tech and life circle up to 1500

RELATIVE CURVES

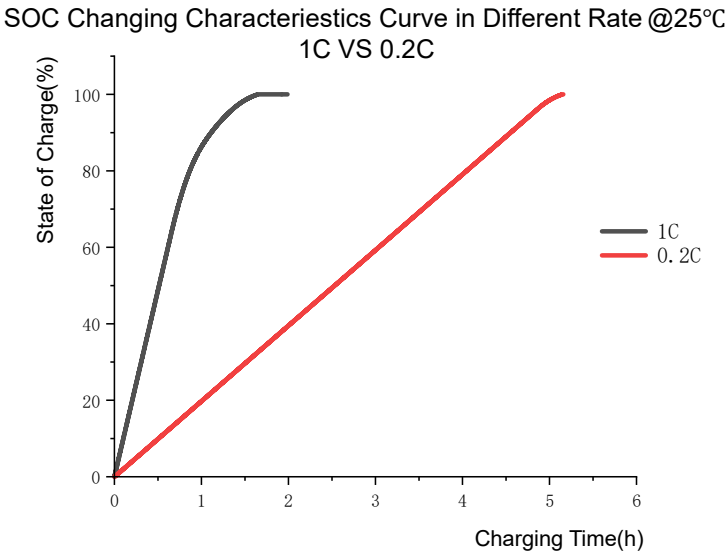

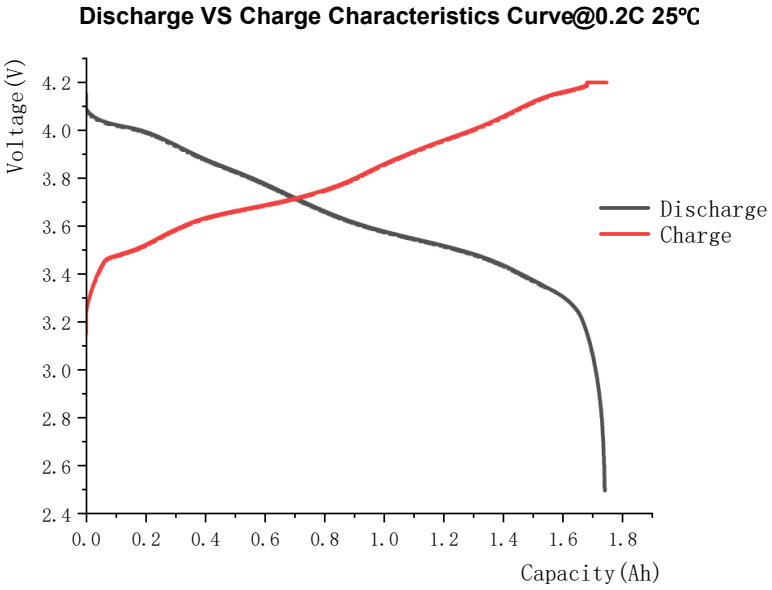

ANNOUNCEMENT

- Only authorized personnel may ship lithium batteries. Contact EHRS if there is a need to ship batteries.
- Avoid prolonged use of higher power devices.
- Reacting and leaking batteries are considered hazardous waste. Please consult Emergency Procedures below.
- Always store LiPo pack in a safe and nonGcombustible container away from flammable/combustible materials.
- Intact batteries can be disposed of as Universal Waste. If the battery is greater than 9V, tape the terminals before disposal.
- Store behind a fire door and where a fire alarm is situated.
- Avoid using charging methods other than wireless chargers.
- Store batteries in a location with low humidity, free from corrosive gas & combustible materials, within the temperature range of 14˚F (-10˚C) and 104˚F (40˚C). For best results, storage between from 41˚F (5˚C) and 77˚F (25˚C) is recommended.
- Always use a proper balance discharger when discharging your batteries
- Charge on a non-flammable surface (concrete, ceramic, steel) away from any flammable material
- ALWAYS evacuate the building to your unit’s designated outside meeting location.