3.7V Lithium Polymer Battery Data Sheet

Model: 354774

Please Find More:

https://www.fpbattery.com/1200mah-lipo-battery/

File Number: A/FP4774-13546

File Version: 01

CONTACT

CUSTOMER SERVICE
86.755.3682.7358
sales@fpbattery.com
Hours of Operation:
9:00am-6:00pm CST, Monday to Friday

LEARN MORE ON:
https://www.fpbattery.com/

DNK POWER COMPANY LIMITED

BATTERY SPECIFICATION

Part Number	DNK 354774
Nominal Voltage	3.7 V
Nominal Capacity	1200 mAh
Internal Impedence	<60mΩ
Charge Voltage	4.2V
Recommended Charge Current	0.2 C
Allowed Max Charge Current	0.5 C
Output Voltage Range	4.2 – 2.5 V
Recommended Discharge Current	0.2 C
Max Continuous Discharge Current	1 C
Pulse Discharge Current	3 C (10 mS)
Discharge Cut-off Voltage	2.5± 0.05V
Cycle Life to 80% Health	500 (0.2C, 25°C)

1

1 YEAR WARRANTY

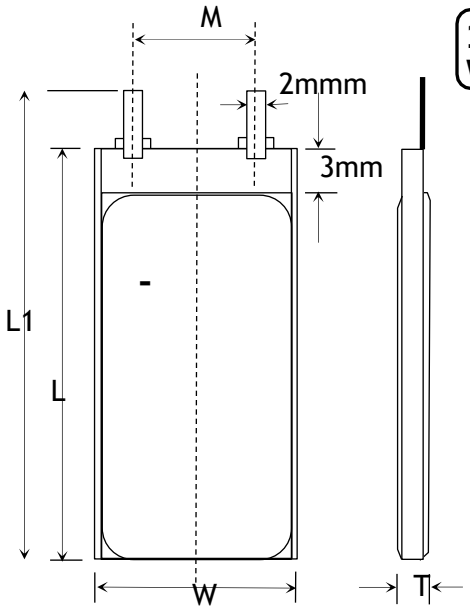

Item	Parameter (mm)
T	3
W	47
M	10
L	74
L_1	76
BL	76 ± 1
CL	100

ENVIRONMENTAL SPECIFICATIONS

Charging Temperature Range	0 – 45°C
Discharging Temperature Range	-20 – 60°C
Storage Period 1 Week	-20 – 45°C
Storage Period 1 Month	-10 – 45°C
Storage Period 6 Months	0 – 35°C

BATTERY PROTECTION

Over Charge	4.275 ± 50mV
Over Discharge	2.5V ± 50mV
Over Current	3A to 5A
Short Circuit	Yes

MECHANICAL SPECIFICATIONS

Dimensions	76x 47 x 3 mm(L*W*T)
Weight	Around 20 g
Battery Terminals	WC/ FL *

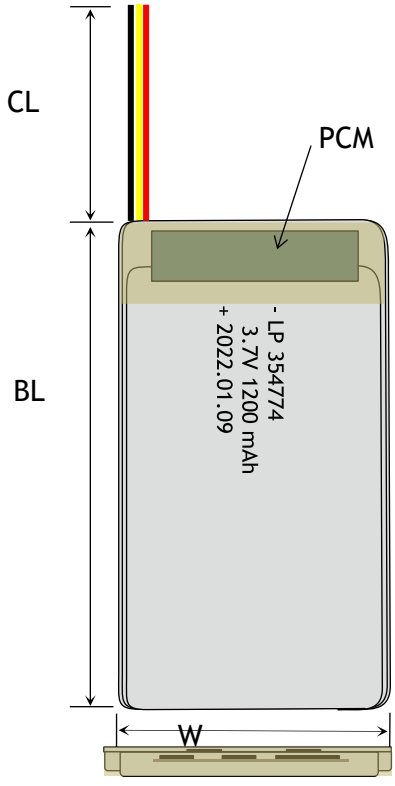

CERTIFICATION

Certification Approval	PLEASE CONSULT SALES

* WC=With Connector FL=Flying Leads UWP=Blue Wrapped PVC
BWP=Black Wrapped PVC BC= Bare Cell

RELATIVE CURVES

Constant Current Charge Characteristics---1.7A

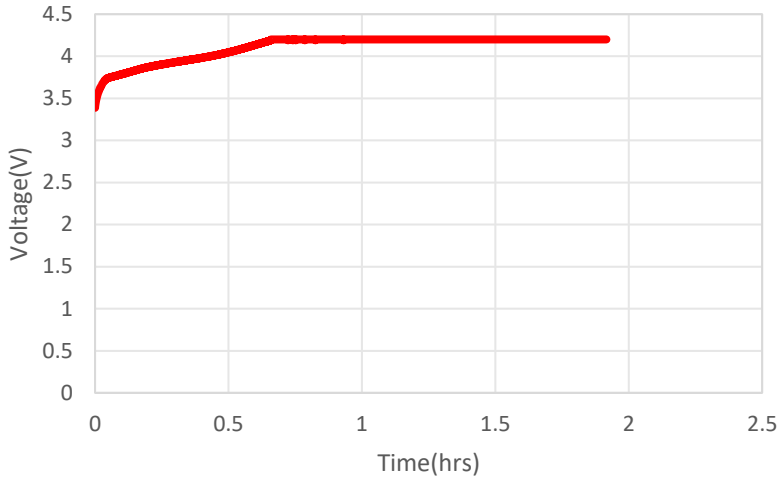

Discharge Characteristics

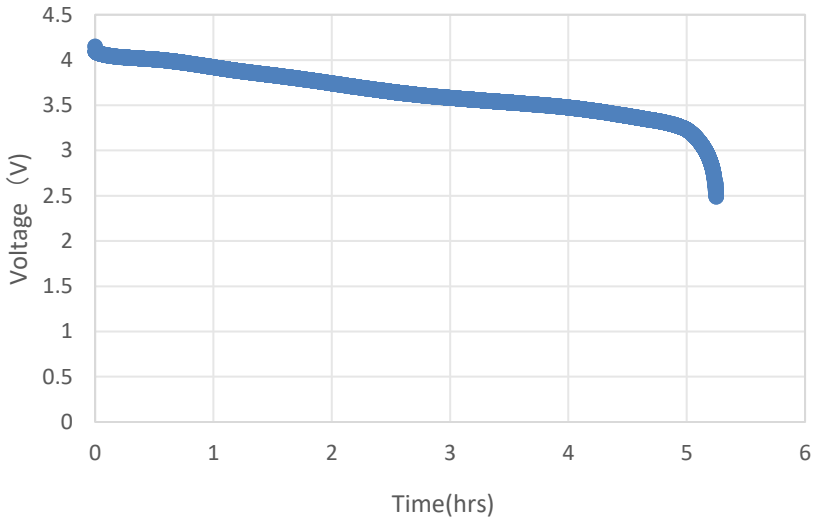

ANNOUNCEMENT

- Avoid placing the battery in a damp environment.
- NEVER attempt to charge a one-time-use (non-rechargeable) Li-Ion or LiPo battery.
- Never expose Batteries to extreme temperatures or direct sunlight. The temperature range must be between 40-120° F (4-49° C).
- Avoid tightening the voltage adjustment knob on the way to use the battery.
- Do not expose the battery to temperature extremes, such as high or low temperatures.
- Do not reverse the polarity.
- The battery should be transported with 10-50% charged states.
- Store and transport in a non-flammable container
- Charge on a non-flammable surface (concrete, ceramic, steel) away from any flammable material
- ALWAYS purchase and use batteries and devices that are listed or approved by a Nationally Recognized Testing Laboratory, such as Underwriter's Laboratories (UL) or Intertek (ETL).
- NEVER put Li-Ion or LiPo batteries in the trash.