3.7V Lithium Polymer Battery Data Sheet

Model: 354764

Please Find More:

https://www.fpbattery.com/3-7v-1000mah-lithium-polymer-battery/

File Number: A/FP4764-9766

File Version: 01

CONTACT

CUSTOMER SERVICE
86.755.3682.7358
sales@fpbattery.com
Hours of Operation:
9:00am-6:00pm CST, Monday to Friday

LEARN MORE ON:
https://www.fpbattery.com/

DNK POWER COMPANY LIMITED

BATTERY SPECIFICATION

Part Number	DNK 354764
Nominal Voltage	3.7 V
Nominal Capacity	1055 mAh
Internal Impedence	<60mΩ
Charge Voltage	4.2V
Recommended Charge Current	0.2 C
Allowed Max Charge Current	0.5 C
Output Voltage Range	4.2 - 2.5 V
Recommended Discharge Current	0.2 C
Max Continuous Discharge Current	1 C
Pulse Discharge Current	3 C (10 mS)
Discharge Cut-off Voltage	2.5± 0.05V
Cycle Life to 80% Health	500 (0.2C, 25°C)

1

ENVIRONMENTAL SPECIFICATIONS

Charging Temperature Range	0 - 45°C
Discharging Temperature Range	-20 - 60°C
Storage Period 1 Week	-20 - 45°C
Storage Period 1 Month	-10 - 45°C
Storage Period 6 Months	0 - 35°C

BATTERY PROTECTION

Over Charge	4.275 ± 50mV
Over Discharge	2.5V ± 50mV
Over Current	3A to 5A
Short Circuit	Yes

MECHANICAL SPECIFICATIONS

Dimensions	66x 47 x 3 mm(L*W*T)
Weight	Around 17 g
Battery Terminals	WC/ FL *

CERTIFICATION

Certification Approval	PLEASE CONSULT SALES

* WC=With Connector FL=Flying Leads UWP=Blue Wrapped PVC BWP=Black Wrapped PVC BC= Bare Cell

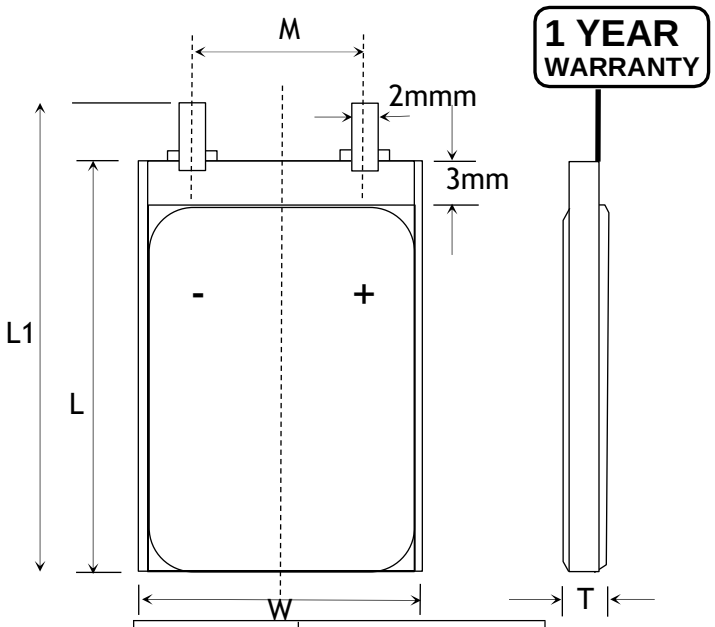

Item	Parameter (mm)
T	3
W	47
M	10
L	64
L_1	66
BL	66 ± 1
CL	100

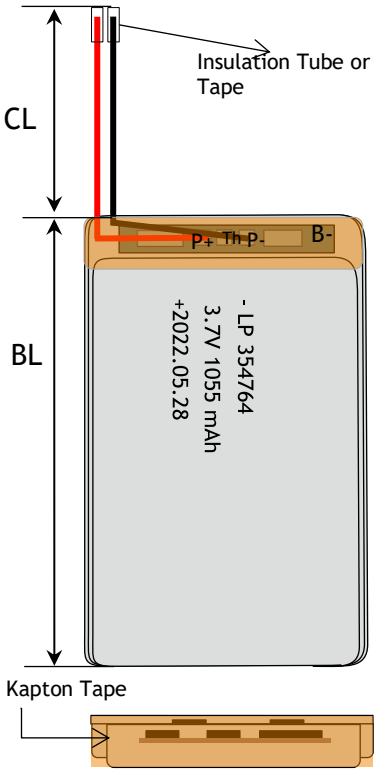

BULK PRODUCTION ACTUAL PICTURES



BARE CELL (BC)



FLYING LEADS (FL)



WITH CONNECTOR (WC)



BLUE WRAPPED PVC (UWP)



BLACK WRAPPED PVC (BWP)

3.7V LIPO BATTERY OPTIONS

Special Ingredients to make batteries work from -40 -85 ° C

Discharging Current up to 100C

Popular JST,Molex,Hirose,Anderson available





LED Power Indicator



Power Button

RELATIVE CURVES

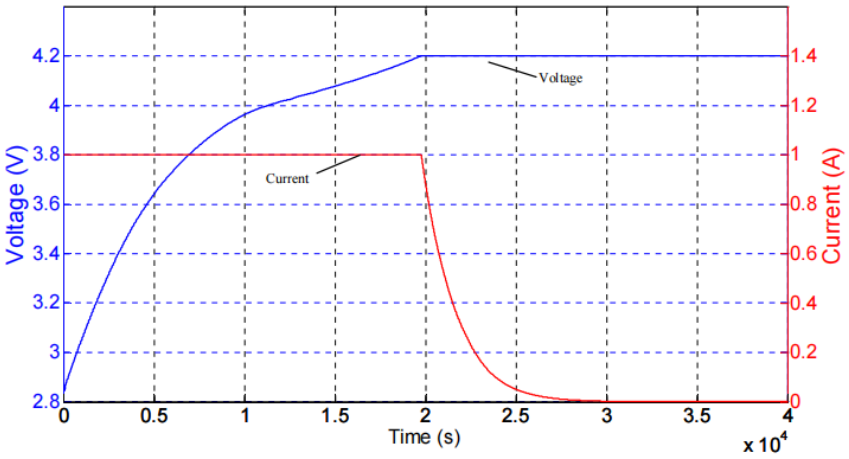

Discharge Temperature Characteristics

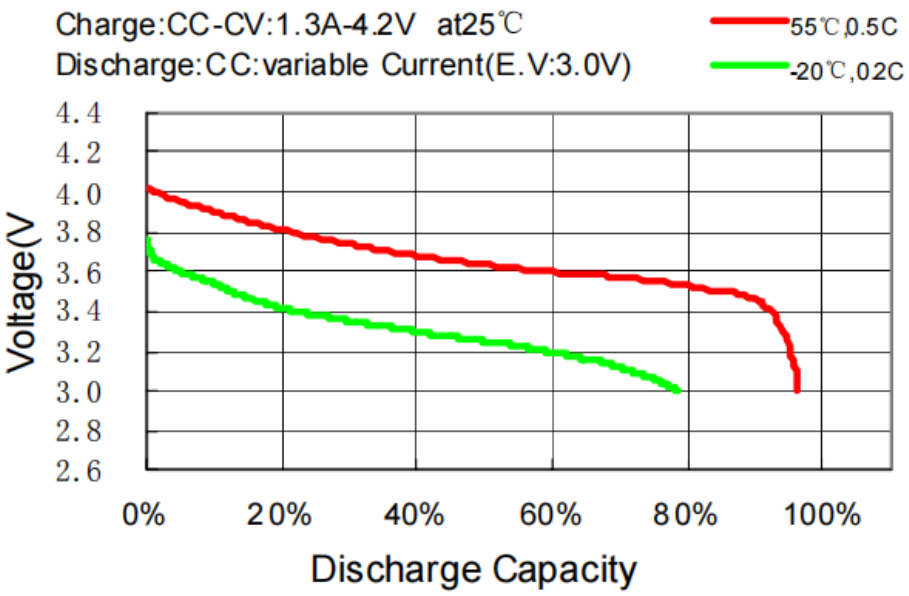

ANNOUNCEMENT

- Never charge a lithium polymer battery pack that has been punctured or damaged in a crash.
- Do not short-circuit the battery.
- Be careful of the polarity when connecting and disconnecting batteries.
- LiPo batteries must only be charged with a manufacturer recommended LiPo charger.
- Never charge a battery that shows signs of puffing.
- Do not allow the battery to come into common contact with metal to prevent a short circuit.
- Read the Product Specification and respect the maximum voltage (4.2V/cell). Never charge higher than 4.25V, which is the maximum voltage. Charging with a higher voltage will irreparably damage the battery and may lead to the start of a fire.
- Before starting work, inspect your battery for signs of damage prior to each use: bulging, hissing, leaking, or smoking. Do not use your battery if it displays any of these characteristics.
- Do not use water to extinguish a buttery fire Use a Class ABC dry fire extinguisher.
- Be aware that many of the more expensive LiPo chargers will automatically detect the cell count of the battery being charged; cheaper chargers will require a manual setting.
- Avoid dropping batteries, dropping Lipos can cause the battery cell to crush causing an internal short which may lead to fire.