# 3.7V Lithium Polymer Battery Data Sheet

Model:  354759

Please Find More:

https://www.fpbattery.com/3-7v-900mah-lithium-polymer-battery/

File Number:  A/FP4759-7565

File Version: 01


CONTACT

CUSTOMER SERVICE
86.755.3682.7358
sales@fpbattery.com
Hours of Operation:
9:00am-6:00pm CST, Monday to Friday

LEARN MORE ON:
https://www.fpbattery.com/

DNK POWER COMPANY LIMITED

## BATTERY SPECIFICATION

| | |
|---|---|
| Part Number | DNK 354759 |
| Nominal Voltage | 3.7 V |
| Nominal Capacity | 970 mAh |
| Internal Impedence | <60mΩ |
| Charge Voltage | 4.2V |
| Recommended Charge Current | 0.2 C |
| Allowed Max Charge Current | 0.5 C |
| Output Voltage Range | 4.2 - 2.5 V |
| Recommended Discharge Current | 0.2 C |
| Max Continuous Discharge Current | 1 C |
| Pulse Discharge Current | 3 C (10 mS) |
| Discharge Cut-off Voltage | 2.5± 0.05V |
| Cycle Life to 80% Health | 500 (0.2C, 25°C) |

1

Inflex and soler

**1 YEAR WARRANTY**

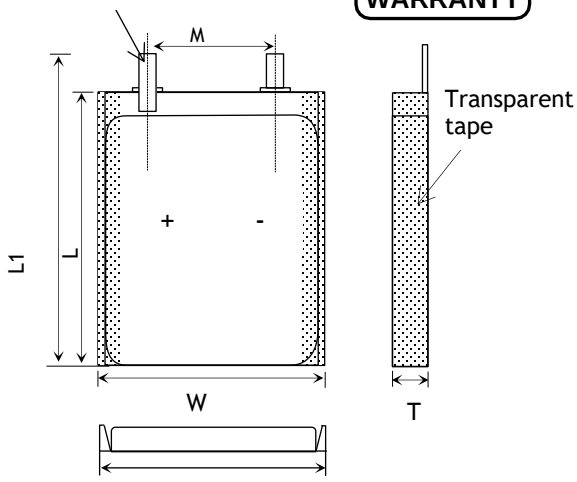


| Item | Parameter (mm) |
|---|---|
| T | 3 |
| W | 47 |
| M | 10 |
| L | 59 |
| $L_1$ | 61 |
| BL | 61 ± 1 |
| CL | 100 |

## ENVIRONMENTAL SPECIFICATIONS

| | |
|---|---|
| Charging Temperature Range | 0 - 45°C |
| Discharging Temperature Range | -20 - 60°C |
| Storage Period 1 Week | -20 - 45°C |
| Storage Period 1 Month | -10 - 45°C |
| Storage Period 6 Months | 0 - 35°C |

## BATTERY PROTECTION

| | |
|---|---|
| Over Charge | 4.275 ± 50mV |
| Over Discharge | 2.5V ± 50mV |
| Over Current | 3A to 5A |
| Short Circuit | Yes |

## MECHANICAL SPECIFICATIONS

| | |
|---|---|
| Dimensions | 61x 47 x 3 mm(L*W*T) |
| Weight | 16 g |
| Battery Terminals | WC/ FL * |

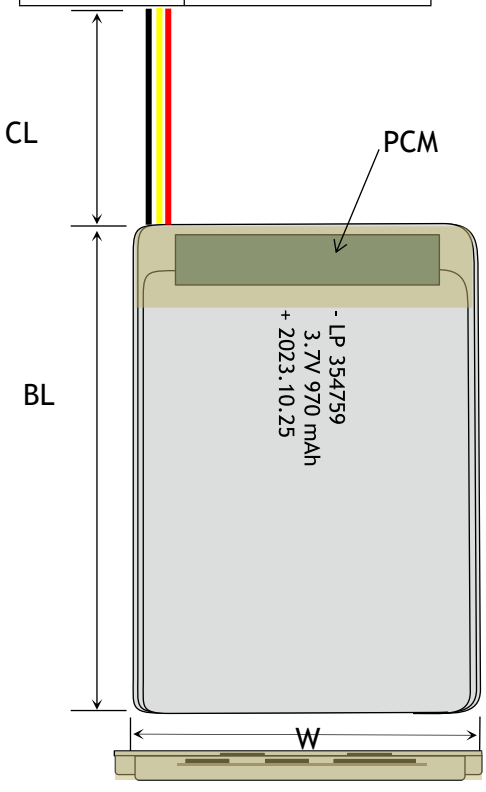


## CERTIFICATION

| | |
|---|---|
| Certification Approval | PLEASE CONSULT SALES |

* WC=With Connector FL=Flying Leads UWP=Blue Wrapped PVC BWP=Black Wrapped PVC BC= Bare Cell

# RELATIVE CURVES

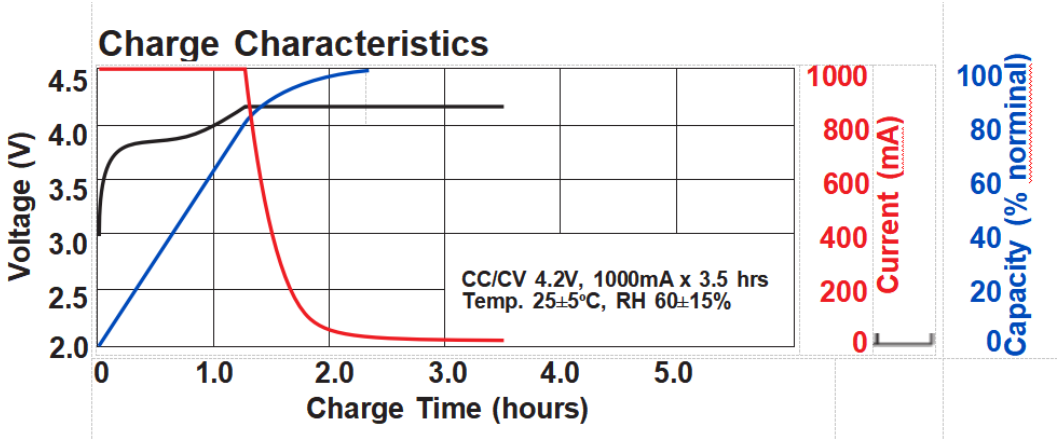


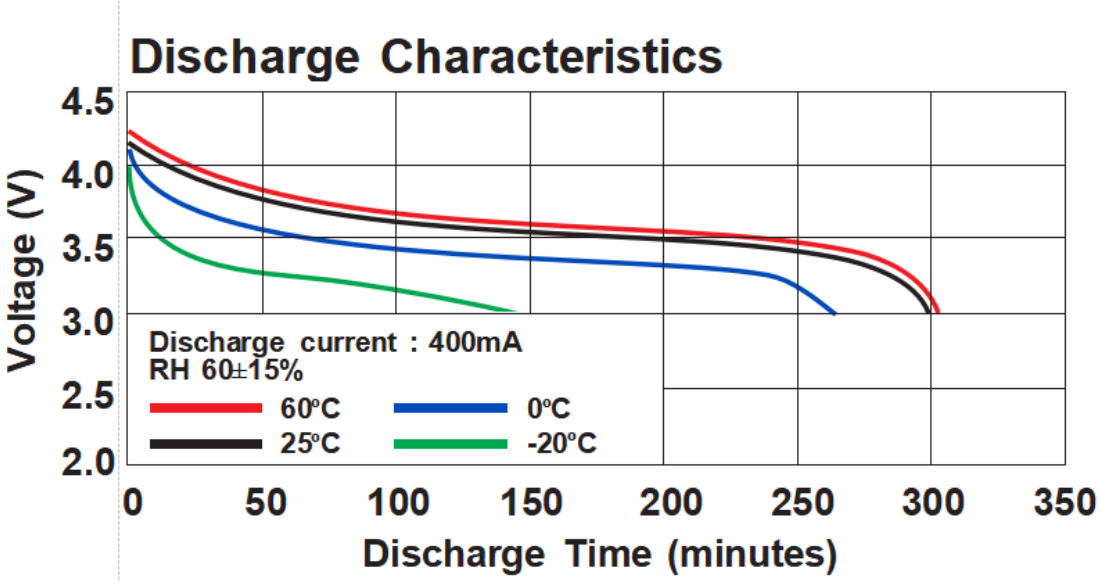


# ANNOUNCEMENT

- Clean the battery connectors regularly to maintain good contact performance.
- Do not throw the battery in a fire.
- Prevent arcing by turning the charger off before disconnecting the battery.
- The battery must be protected against shocks and splashing of materials from outside the model.
- Before starting work,ensure that a written experimental protocol including safety information is available.
- Avoid bumping or dropping the battery to prevent damage or internal short circuit.
- For thermal runaway/fire, activate fire alarm, evacuate, contact public safety.
- If the electrolyte in the cells gets on your skin, wash the area thoroughly with soap and water. If it gets in your eyes, rinse at emergency eyewash station for 15 minutes with cool water and seek immediate medical attention.
- If the battery swells during charging, stop charging immediately and disconnect the battery from the charger. Leave the battery outside for a few hours and observe. Then recycle the battery according to the instructions of your country/region.
- ALWAYS use the correct battery and charger size and type that is specified for the device.
- Use a reliable power adapter to avoid unstable current output.