3.7V Lithium Polymer Battery Data Sheet

Model: 354265

Please Find More:

https://www.fpbattery.com/3-7v-900mah-lithium-polymer-battery/

File Number: A/FP4265-13058

File Version: 01

CONTACT

CUSTOMER SERVICE
86.755.3682.7358
sales@fpbattery.com
Hours of Operation:
9:00am-6:00pm CST, Monday to Friday

LEARN MORE ON:
https://www.fpbattery.com/

DNK POWER COMPANY LIMITED

BATTERY SPECIFICATION

Part Number	DNK 354265
Nominal Voltage	3.7 V
Nominal Capacity	955 mAh
Internal Impedence	<60mΩ
Charge Voltage	4.2V
Recommended Charge Current	0.2 C
Allowed Max Charge Current	0.5 C
Output Voltage Range	4.2 – 2.5 V
Recommended Discharge Current	0.2 C
Max Continuous Discharge Current	1 C
Pulse Discharge Current	3 C (10 mS)
Discharge Cut-off Voltage	2.5± 0.05V
Cycle Life to 80% Health	500 (0.2C, 25°C)

1

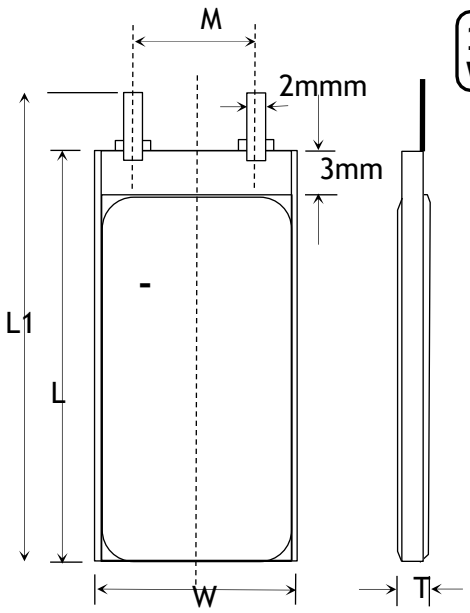

1 YEAR WARRANTY

Item	Parameter (mm)
T	3
W	42
M	10
L	65
L_1	67
BL	67 ± 1
CL	100

ENVIRONMENTAL SPECIFICATIONS

Charging Temperature Range	0 – 45°C
Discharging Temperature Range	-20 – 60°C
Storage Period 1 Week	-20 – 45°C
Storage Period 1 Month	-10 – 45°C
Storage Period 6 Months	0 – 35°C

BATTERY PROTECTION

Over Charge	4.275 ± 50mV
Over Discharge	2.5V ± 50mV
Over Current	3A to 5A
Short Circuit	Yes

MECHANICAL SPECIFICATIONS

Dimensions	67x 42 x 3 mm(L*W*T)
Weight	Around 15 g
Battery Terminals	WC/ FL *

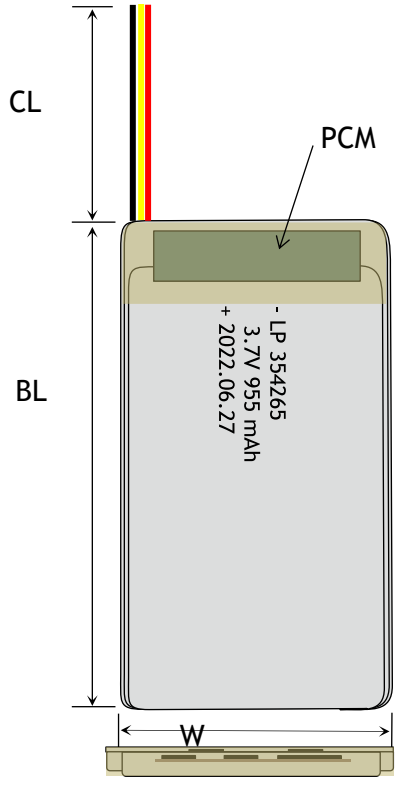

CERTIFICATION

Certification Approval	PLEASE CONSULT SALES

* WC=With Connector FL=Flying Leads UWP=Blue Wrapped PVC
BWP=Black Wrapped PVC BC= Bare Cell

RELATIVE CURVES

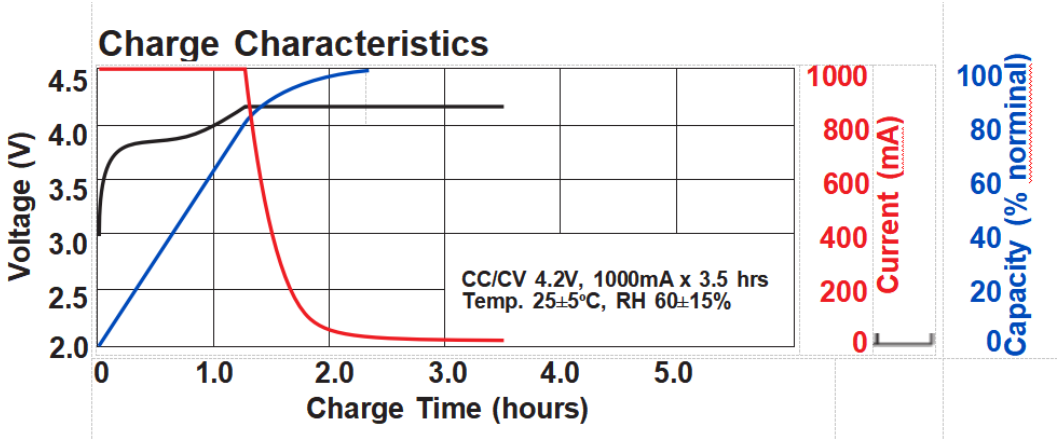

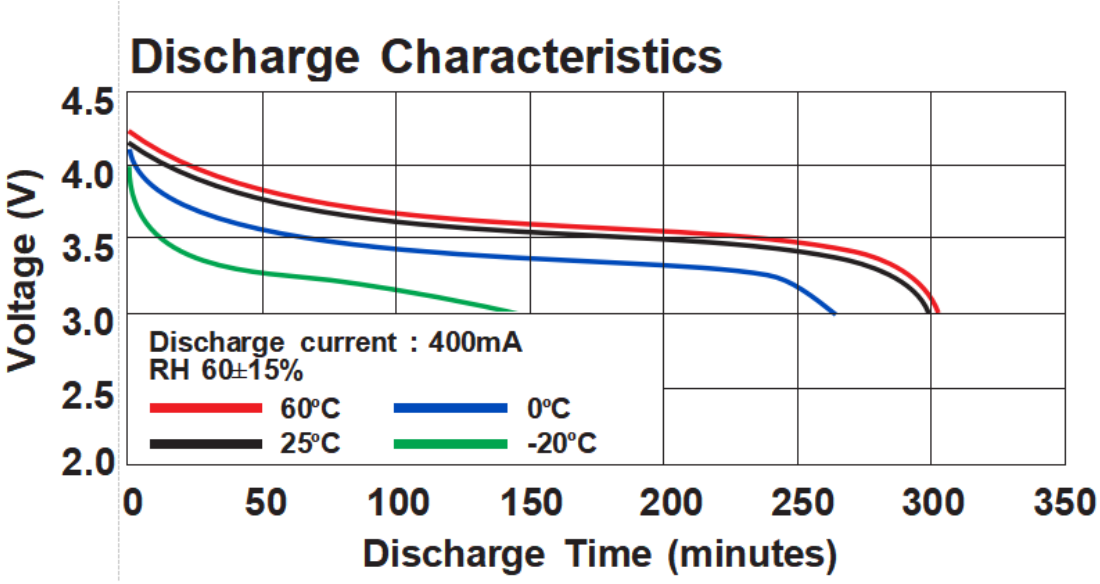

ANNOUNCEMENT

- Always use the appropriate balancer/charger when charging your LiPo battery pack.
- Have a class ABC or CO2 fire extinguisher nearby the storage area.
- ALWAYS visually inspect stored Li-Ion and LiPo batteries, at a minimum, weekly.
- Do not reverse the polarity.
- Discharge the battery to 50% before storing it for an extended period of time.
- Avoid changing the battery frequently during use.
- Charging current should be less than maximum charge current specified in the Product Specification.
- Never discharge Batteries to voltage below which they are rated by the manufacturer when measured under load(connected to the vehicle or a charger capable of discharge). Batteries discharged to a voltage lower than the lowest approved voltage may be damaged, resulting in loss of performance and potential fire when batteries are charged.
- Test equipment for short circuits prior to installing batteries.
- Avoid exposing the battery to high humidity for long periods of time.
- Avoid prolonged use of the battery until depleted.