3.7V Lithium Polymer Battery Data Sheet

Model: 354248

Please Find More:

https://www.fpbattery.com/3-7v-650mah-lithium-polymer-battery/

File Number: A/FP4248-5125

File Version: 01

CONTACT

CUSTOMER SERVICE
86.755.3682.7358
sales@fpbattery.com
Hours of Operation:
9:00am-6:00pm CST, Monday to Friday

LEARN MORE ON:
https://www.fpbattery.com/

DNK POWER COMPANY LIMITED

BATTERY SPECIFICATION

Part Number	DNK 354248
Nominal Voltage	3.7 V
Nominal Capacity	705 mAh
Internal Impedence	<60mΩ
Charge Voltage	4.2V
Recommended Charge Current	0.2 C
Allowed Max Charge Current	0.5 C
Output Voltage Range	4.2 - 2.5 V
Recommended Discharge Current	0.2 C
Max Continuous Discharge Current	1 C
Pulse Discharge Current	3 C (10 mS)
Discharge Cut-off Voltage	2.5± 0.05V
Cycle Life to 80% Health	500 (0.2C, 25°C)

1

1 YEAR WARRANTY

Inflex and soler

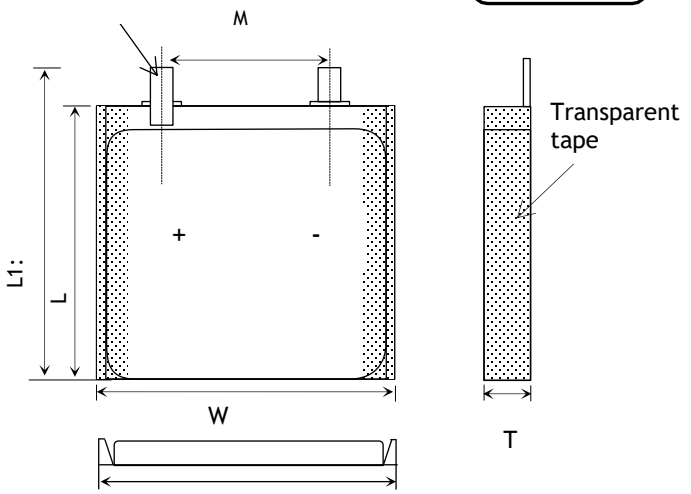

Item	Parameter (mm)
T	3
W	42
M	10
L	48
L_1	50
BL	50 ± 1
CL	100

ENVIRONMENTAL SPECIFICATIONS

Charging Temperature Range	0 - 45°C
Discharging Temperature Range	-20 - 60°C
Storage Period 1 Week	-20 - 45°C
Storage Period 1 Month	-10 - 45°C
Storage Period 6 Months	0 - 35°C

BATTERY PROTECTION

Over Charge	4.275 ± 50mV
Over Discharge	2.5V ± 50mV
Over Current	3A to 5A
Short Circuit	Yes

MECHANICAL SPECIFICATIONS

Dimensions	50x 42 x 3 mm(L*W*T)
Weight	Around 11 g
Battery Terminals	WC/ FL *

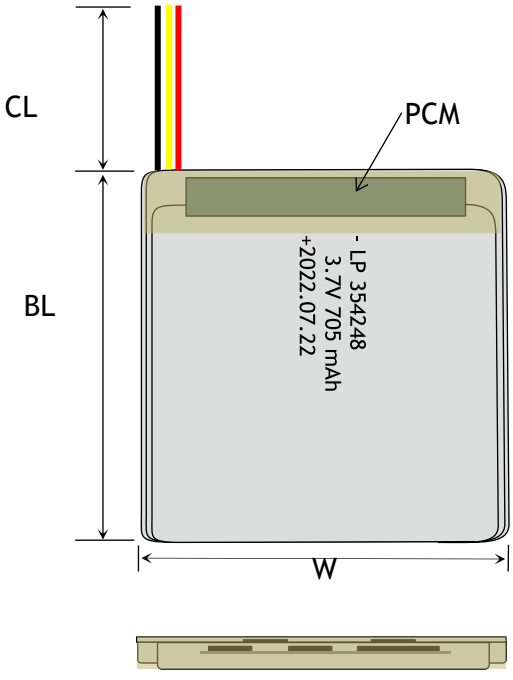

CERTIFICATION

Certification Approval	PLEASE CONSULT SALES

* aWC=With Connector FL=Flying Leads UWP=Blue Wrapped PVC
BWP=Black Wrapped PVC BC= Bare Cell

BULK PRODUCTION ACTUAL PICTURES



BARE CELL (BC)



FLYING LEADS (FL)



WITH CONNECTOR (WC)



BLUE WRAPPED PVC (UWP)



BLACK WRAPPED PVC (BWP)

3.7V LIPO BATTERY OPTIONS



Special Ingredients to make batteries work from -40 -85 ° C



Discharging Current up to 100C



Popular JST,Molex,Hirose,Anderson available



LED Power Indicator



Power Button



Upgrade to LifePo4 tech and life circle up to 1500

RELATIVE CURVES

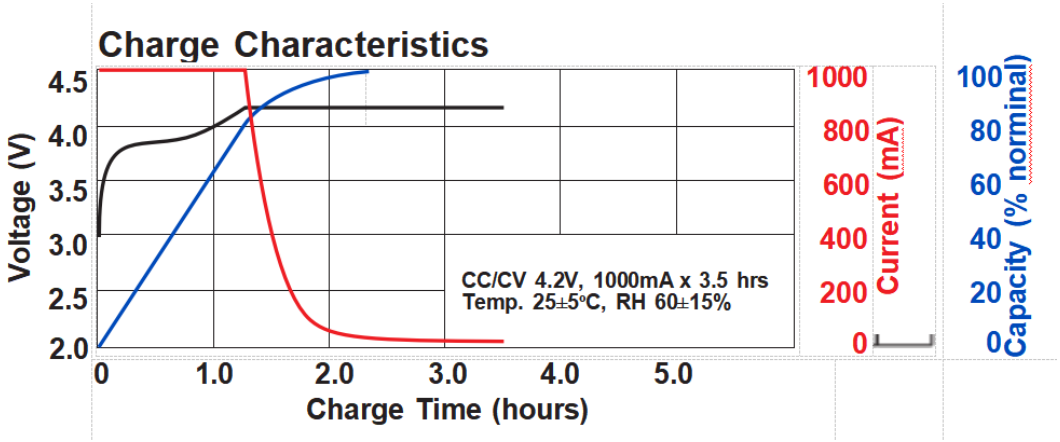

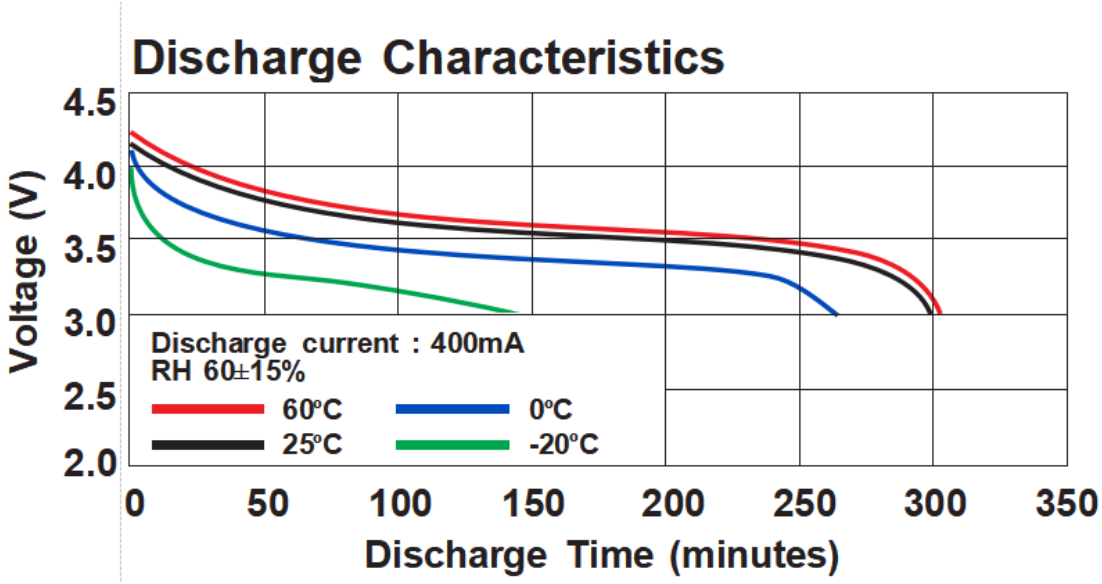

ANNOUNCEMENT

- If the electrolyte in the cells gets on your skin, wash the area thoroughly with soap and water. If it gets in your eyes, rinse at emergency eyewash station for 15 minutes with cool water and seek immediate medical attention.
- Do not leave the battery in a hot vehicle interior.
- Never store loose Batteries together, the Batteries' terminals may contact one another causing a short circuit.
- Do not puncture the cells as this could cause a fire.
- Follow all safe operating guidelines and recommendations provided by the manufacturer.
- Avoid using batteries that have exceeded their service life.
- Do not reverse the polarity.
- If a cell is venting or smoking, evacuate, all personnel from the area, closing doors behind you. The area should be secured to ensure that no unnecessary persons enter.
- If the electrolyte in the cells gets on your skin, wash the area thoroughly with soap and water. If it gets in your eyes, rinse at emergency eyewash station for 15 minutes with cool water and seek immediate medical attention.
- Store lithium batteries in a dedicated, vented fire-rated cabinet. Keep combustible materials clear of the cabinet. Label cabinet as containing lithium batteries.
- NEVER charge a device under a pillow, on a bed, on a carpet, on a couch, or other combustible material.