3.7V Lithium Polymer Battery Data Sheet

Model: 354089

Please Find More:

https://www.fpbattery.com/1200mah-lipo-battery/

File Number: A/FP4089-20660

File Version: 01

CONTACT

CUSTOMER SERVICE
86.755.3682.7358
sales@fpbattery.com
Hours of Operation:
9:00am-6:00pm CST, Monday to Friday

LEARN MORE ON:
https://www.fpbattery.com/

DNK POWER COMPANY LIMITED

BATTERY SPECIFICATION

Part Number	DNK 354089
Nominal Voltage	3.7 V
Nominal Capacity	1200 mAh
Internal Impedence	<60mΩ
Charge Voltage	4.2V
Recommended Charge Current	0.2 C
Allowed Max Charge Current	0.5 C
Output Voltage Range	4.2 - 2.5 V
Recommended Discharge Current	0.2 C
Max Continuous Discharge Current	1 C
Pulse Discharge Current	3 C (10 mS)
Discharge Cut-off Voltage	2.5± 0.05V
Cycle Life to 80% Health	500 (0.2C, 25°C)

1

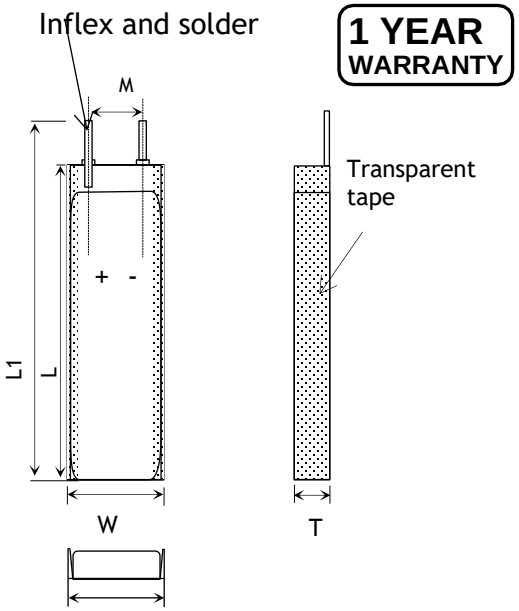

Item	Parameter (mm)
T	3
W	40
M	10
L	89
L_1	91
BL	91 ± 1
CL	100

ENVIRONMENTAL SPECIFICATIONS

Charging Temperature Range	0 - 45°C
Discharging Temperature Range	-20 - 60°C
Storage Period 1 Week	-20 - 45°C
Storage Period 1 Month	-10 - 45°C
Storage Period 6 Months	0 - 35°C

BATTERY PROTECTION

Over Charge	4.275 ± 50mV
Over Discharge	2.5V ± 50mV
Over Current	3A to 5A
Short Circuit	Yes

MECHANICAL SPECIFICATIONS

Dimensions	91x 40 x 3 mm(L*W*T)
Weight	20 g
Battery Terminals	WC/ FL *

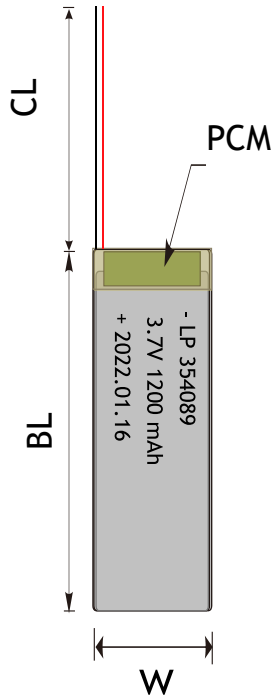

CERTIFICATION

Certification Approval	PLEASE CONSULT SALES

* WC=With Connector FL=Flying Leads UWP=Blue Wrapped PVC
BWP=Black Wrapped PVC BC= Bare Cell

BULK PRODUCTION ACTUAL PICTURES



BARE CELL (BC)



FLYING LEADS (FL)



WITH CONNECTOR (WC)



BLUE WRAPPED PVC (UWP)



BLACK WRAPPED PVC (BWP)

3.7V LIPO BATTERY OPTIONS



Special Ingredients to make batteries work from -40 -85 ° C



Discharging Current up to 100C



Popular JST,Molex,Hirose,Anderson available



LED Power Indicator



Power Button



Upgrade to LifePo4 tech and life circle up to 1500

RELATIVE CURVES

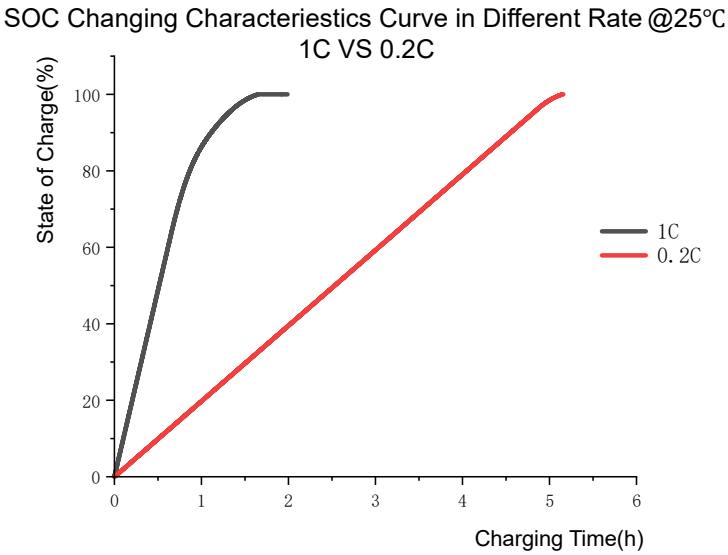

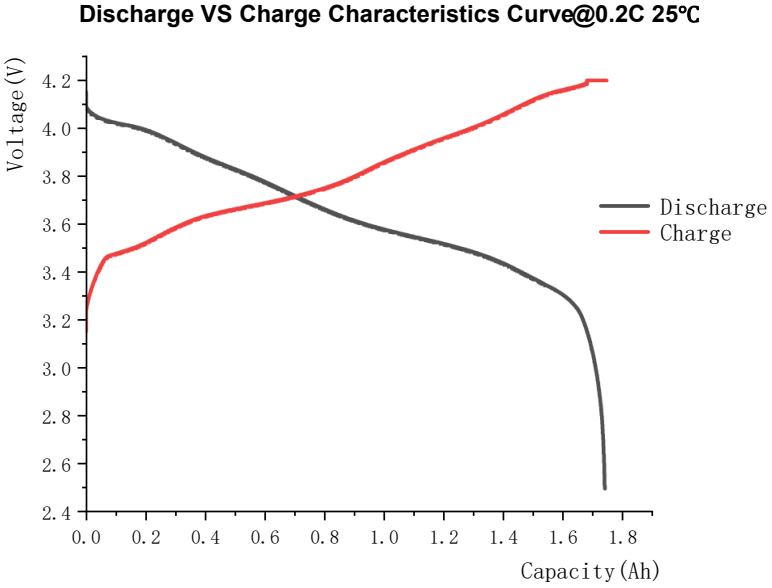

ANNOUNCEMENT

- Always use a compatible balanced mode charger, specifically designed for the chemistry of battery you are using.
- Do not open the battery system or modules unless you have a risk assessment, training and permission.
- Keep all batteries out of the reach of children.
- Do not inhale the gasses of a damaged battery or ingest the contents. If you do accidentally swallow the contents of LiPo cells seek medical attention immediately.
- Read the Product Specification and respect the maximum voltage (4.2V/cell). Never charge higher than 4.25V, which is the maximum voltage. Charging with a higher voltage will irreparably damage the battery and may lead to the start of a fire.
- Use high quality battery connectors. Using connectors that do not fit tightly into the battery socket may result in overheating and melting of the battery case. Remove the connectors from the battery after EVERY use and during storage. Failure to do so will result in plug fatigue resulting in a bad connection and possible case melting. Replace connectors frequently to preserve good connections.
- If you have dropped or damageda LiPo battery in anyway, do not attempt to charge it.
- Avoid prolonged use of the device with a low battery.
- Do not expose the battery to direct sunlight for extended periods of time.
- No charging should take place overnight.
- Use the charger program to charge the LiPo batteries, never use any other program.