3.7V Lithium Polymer Battery Data Sheet

Model: 354085

Please Find More:

https://www.fpbattery.com/1200mah-lipo-battery/

File Number: A/FP4085-20022

File Version: 01

CONTACT

CUSTOMER SERVICE
86.755.3682.7358
sales@fpbattery.com
Hours of Operation:
9:00am-6:00pm CST, Monday to Friday

LEARN MORE ON:
https://www.fpbattery.com/

DNK POWER COMPANY LIMITED

BATTERY SPECIFICATION

Part Number	DNK 354085
Nominal Voltage	3.7 V
Nominal Capacity	1200 mAh
Internal Impedence	<60mΩ
Charge Voltage	4.2V
Recommended Charge Current	0.2 C
Allowed Max Charge Current	0.5 C
Output Voltage Range	4.2 - 2.5 V
Recommended Discharge Current	0.2 C
Max Continuous Discharge Current	1 C
Pulse Discharge Current	3 C (10 mS)
Discharge Cut-off Voltage	2.5± 0.05V
Cycle Life to 80% Health	500 (0.2C, 25°C)

1

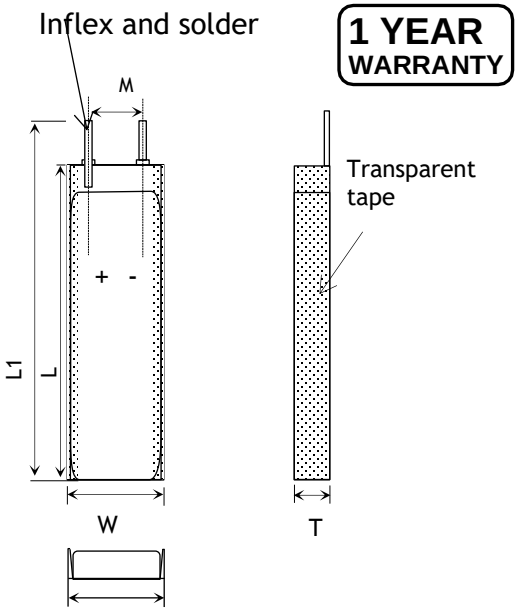

Item	Parameter (mm)
T	3
W	40
M	10
L	85
L_1	87
BL	87 ± 1
CL	100

ENVIRONMENTAL SPECIFICATIONS

Charging Temperature Range	0 - 45°C
Discharging Temperature Range	-20 - 60°C
Storage Period 1 Week	-20 - 45°C
Storage Period 1 Month	-10 - 45°C
Storage Period 6 Months	0 - 35°C

BATTERY PROTECTION

Over Charge	4.275 ± 50mV
Over Discharge	2.5V ± 50mV
Over Current	3A to 5A
Short Circuit	Yes

MECHANICAL SPECIFICATIONS

Dimensions	87x 40 x 3 mm(L*W*T)
Weight	20 g
Battery Terminals	WC/ FL *

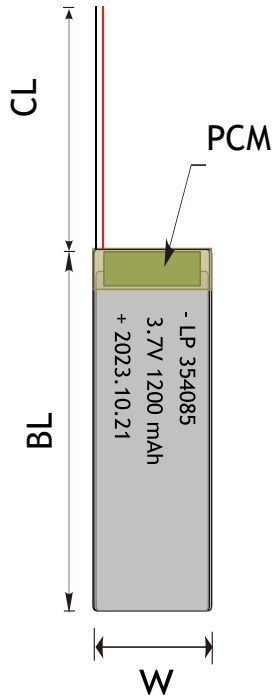

CERTIFICATION

Certification Approval	PLEASE CONSULT SALES

* WC=With Connector FL=Flying Leads UWP=Blue Wrapped PVC
BWP=Black Wrapped PVC BC= Bare Cell

BULK PRODUCTION ACTUAL PICTURES



BARE CELL (BC)



FLYING LEADS (FL)



WITH CONNECTOR (WC)



BLUE WRAPPED PVC (UWP)



BLACK WRAPPED PVC (BWP)

3.7V LIPO BATTERY OPTIONS



Special Ingredients to make batteries work from -40 -85 ° C



Discharging Current up to 100C



Popular JST,Molex,Hirose,Anderson available



LED Power Indicator



Power Button



Upgrade to LifePo4 tech and life circle up to 1500

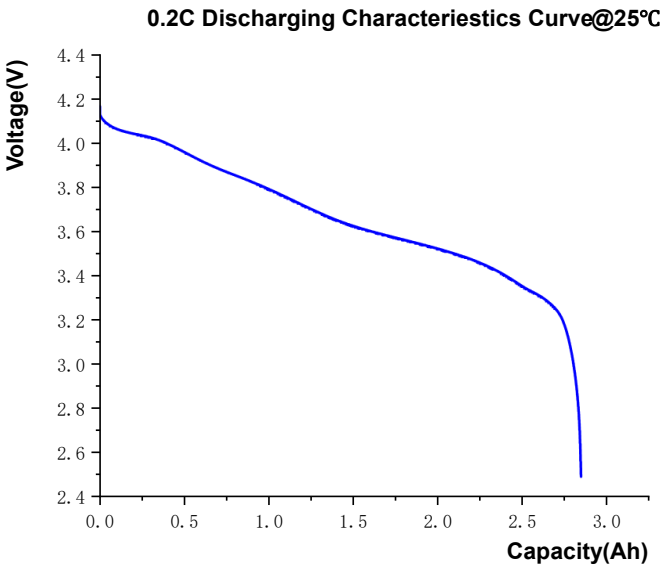

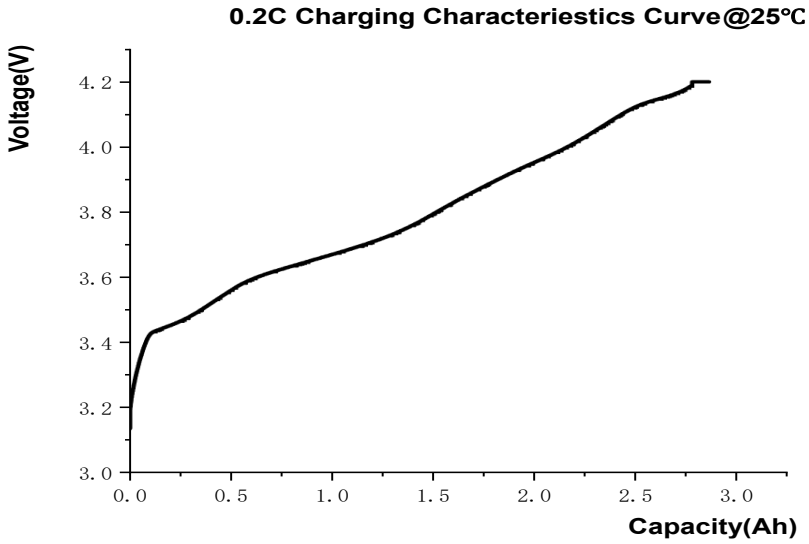

RELATIVE CURVES

ANNOUNCEMENT

- Avoid storing unused batteries for long periods of time, and perform regular battery maintenance and charging.
- Only charge LiPo batteries with chargers specifically designed to charge LiPo batteries. NEVER use a NiMH or NiCd charger! Failure to use a proper charger might cause a fire resulting in personal injury and/or property damage. Some LiPo chargers on the market may have technical deficiencies which may result in incorrect charging or charging at an improper rate. It is your responsibility to determine that your charger works properly.
- 3.6V~3.9V range. Always store your LiPo pack in a safe and non flammable container away from flammable objects.
- ALWAYS visually inspect stored Li-Ion and LiPo batteries, at a minimum, weekly.
- Store LiPo batteries at room temperature between 5ºC and 27ºC (40ºF and 80ºF) for best results. The lower the temperature the better.
- Always set the charger to proper cell count and/or voltage listed on Batteries' labels.
- Double check that the setting for the lithium polymer charger is correct for the pack being charged – this includes the cell count as well as the current settings.
- Store LiPo batteries to be disposed of in a dedicated area of the battery storage cabinet or a dedicated area of the lab away from combustible materials.
- Do not inhale the gasses of a damaged battery or ingest the contents. If you do accidentally swallow the contents of LiPo cells seek medical attention immediately.
- Charge only with an approved LiPo charger, according to the parameters for the particular battery
- Charge at correct rate and proper voltage for either use or storage.