3.7V Lithium Polymer Battery Data Sheet

Model: 353960

Please Find More:

https://www.fpbattery.com/3-7v-800mah-lithium-polymer-battery/

File Number: A/FP3960-12898

File Version: 01

CONTACT

CUSTOMER SERVICE
86.755.3682.7358
sales@fpbattery.com
Hours of Operation:
9:00am-6:00pm CST, Monday to Friday

LEARN MORE ON:
https://www.fpbattery.com/

DNK POWER COMPANY LIMITED

BATTERY SPECIFICATION

Part Number	DNK 353960
Nominal Voltage	3.7 V
Nominal Capacity	820 mAh
Internal Impedence	<60mΩ
Charge Voltage	4.2V
Recommended Charge Current	0.2 C
Allowed Max Charge Current	0.5 C
Output Voltage Range	4.2 - 2.5 V
Recommended Discharge Current	0.2 C
Max Continuous Discharge Current	1 C
Pulse Discharge Current	3 C (10 mS)
Discharge Cut-off Voltage	2.5± 0.05V
Cycle Life to 80% Health	500 (0.2C, 25°C)

1

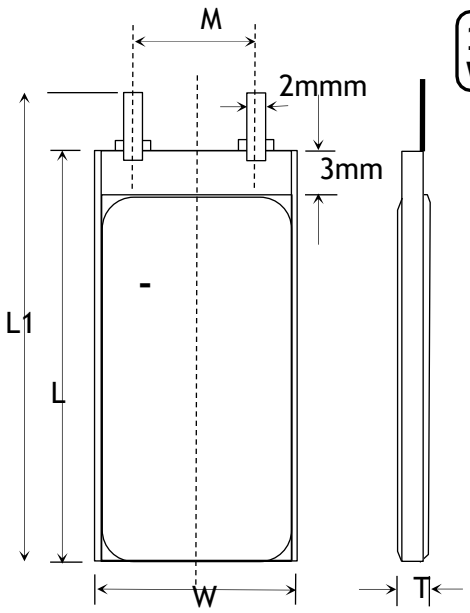

1 YEAR WARRANTY

Item	Parameter (mm)
T	3
W	39
M	10
L	60
L_1	62
BL	62 ± 1
CL	100

ENVIRONMENTAL SPECIFICATIONS

Charging Temperature Range	0 - 45°C
Discharging Temperature Range	-20 - 60°C
Storage Period 1 Week	-20 - 45°C
Storage Period 1 Month	-10 - 45°C
Storage Period 6 Months	0 - 35°C

BATTERY PROTECTION

Over Charge	4.275 ± 50mV
Over Discharge	2.5V ± 50mV
Over Current	3A to 5A
Short Circuit	Yes

MECHANICAL SPECIFICATIONS

Dimensions	62x 39 x 3 mm(L*W*T)
Weight	Around 13 g
Battery Terminals	WC/ FL *

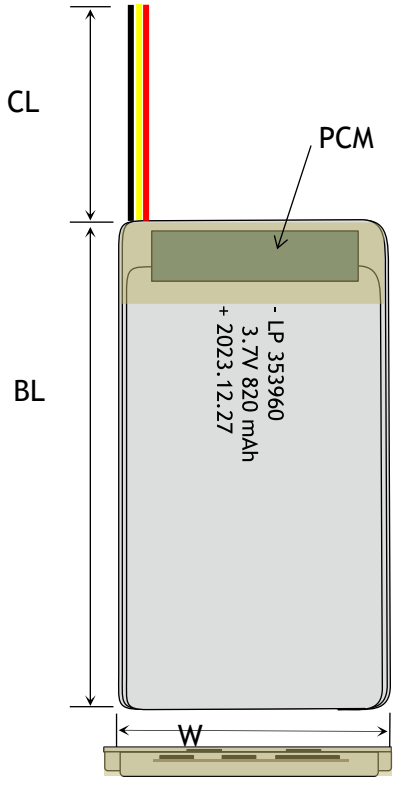

CERTIFICATION

Certification Approval	PLEASE CONSULT SALES

* WC=With Connector FL=Flying Leads UWP=Blue Wrapped PVC
BWP=Black Wrapped PVC BC= Bare Cell

RELATIVE CURVES

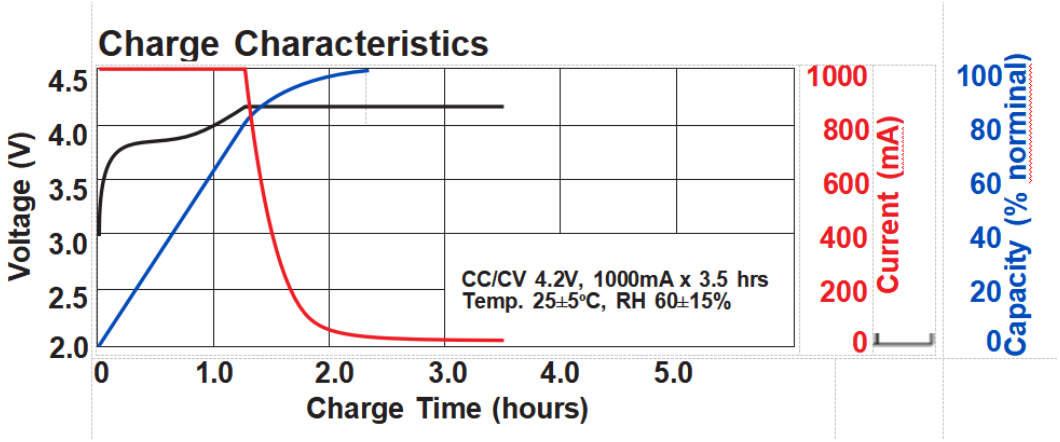

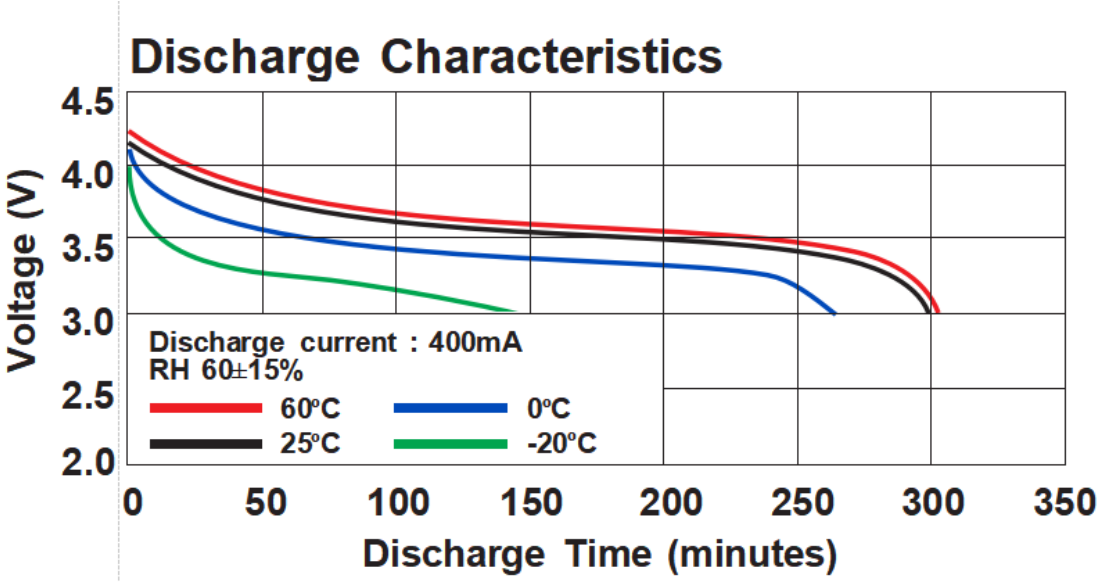

ANNOUNCEMENT

- Dispose of defective Lipos in accordance with local ordinances and in a safe manner.
- If you start seeing any physical changes to the battery while charging example puffing, STOP charging immediately and dispose of the battery responsibly.
- LiPo batteries must only be charged with a manufacturer recommended LiPo charger.
- Regularly check the condition of the battery. Do not use if damaged or swollen
- Do not reverse the polarity.
- LiPo safe bags help contain heat and flames that results if a Li-Ion battery combusts during charging or while in storage.
- NEVER attempt to extinguish this type of fire yourself – portable fire extinguishers have proven to be ineffective in extinguishing Li-Ion and LiPo battery fires.
- Always set the charger to proper cell count and/or voltage listed on Batteries' labels.
- The discharge temperature range is between 32˚F (0˚C) and 113˚F (45˚C).
- Emergency Response and Disposal
- Avoid crushing or excessive pressure on the battery.