3.7V Lithium Polymer Battery Data Sheet

Model: 353942

Please Find More:

https://www.fpbattery.com/3-7v-500mah-lithium-polymer-battery/

File Number: A/FP3942-3582

File Version: 01

CONTACT

CUSTOMER SERVICE
86.755.3682.7358
sales@fpbattery.com
Hours of Operation:
9:00am-6:00pm CST, Monday to Friday

LEARN MORE ON:
https://www.fpbattery.com/

DNK POWER COMPANY LIMITED

BATTERY SPECIFICATION

Part Number	DNK 353942
Nominal Voltage	3.7 V
Nominal Capacity	575 mAh
Internal Impedence	<60mΩ
Charge Voltage	4.2V
Recommended Charge Current	0.2 C
Allowed Max Charge Current	0.5 C
Output Voltage Range	4.2 - 2.5 V
Recommended Discharge Current	0.2 C
Max Continuous Discharge Current	1 C
Pulse Discharge Current	3 C (10 mS)
Discharge Cut-off Voltage	2.5± 0.05V
Cycle Life to 80% Health	500 (0.2C, 25°C)

1

1 YEAR WARRANTY

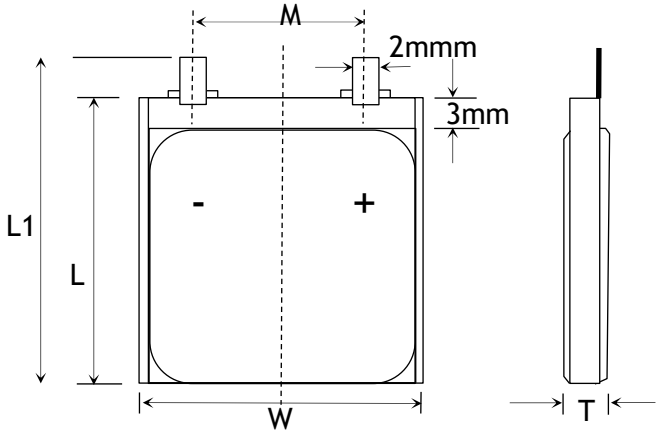

Item	Parameter (mm)
T	3
W	39
M	10
L	42
L_1	44
BL	44 ± 1
CL	100

ENVIRONMENTAL SPECIFICATIONS

Charging Temperature Range	0 - 45°C
Discharging Temperature Range	-20 - 60°C
Storage Period 1 Week	-20 - 45°C
Storage Period 1 Month	-10 - 45°C
Storage Period 6 Months	0 - 35°C

BATTERY PROTECTION

Over Charge	4.275 ± 50mV
Over Discharge	2.5V ± 50mV
Over Current	3A to 5A
Short Circuit	Yes

MECHANICAL SPECIFICATIONS

Dimensions	44x 39 x 3 mm(L*W*T)
Weight	Around 9 g
Battery Terminals	WC/ FL *

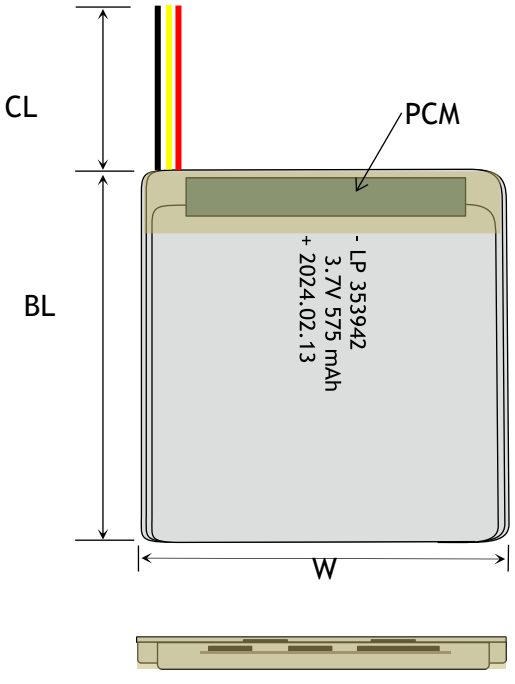

CERTIFICATION

Certification Approval	PLEASE CONSULT SALES

* WC=With Connector FL=Flying Leads UWP=Blue Wrapped PVC
BWP=Black Wrapped PVC BC= Bare Cell

BULK PRODUCTION ACTUAL PICTURES



BARE CELL (BC)



FLYING LEADS (FL)



WITH CONNECTOR (WC)



BLUE WRAPPED PVC (UWP)



BLACK WRAPPED PVC (BWP)

3.7V LIPO BATTERY OPTIONS



Special Ingredients to make batteries work from -40 -85 ° C



Discharging Current up to 100C



Popular JST,Molex,Hirose,Anderson available



LED Power Indicator



Power Button



Upgrade to LifePo4 tech and life circle up to 1500

RELATIVE CURVES

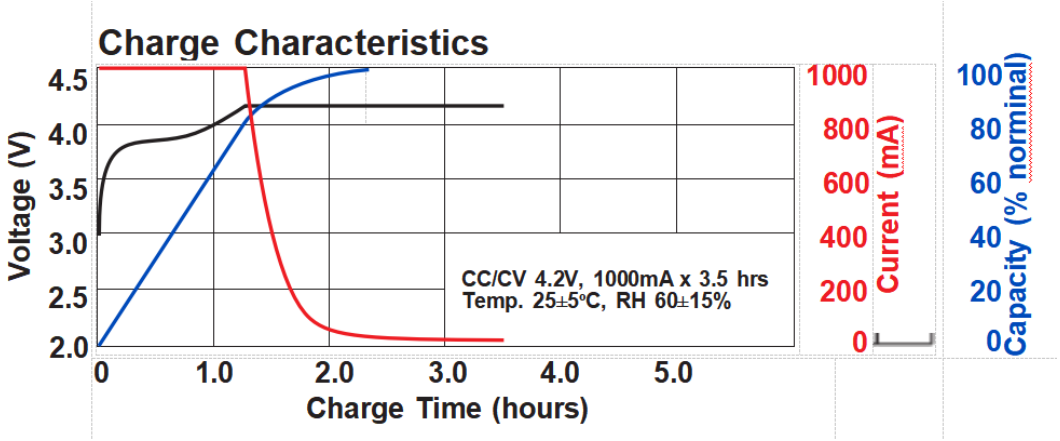

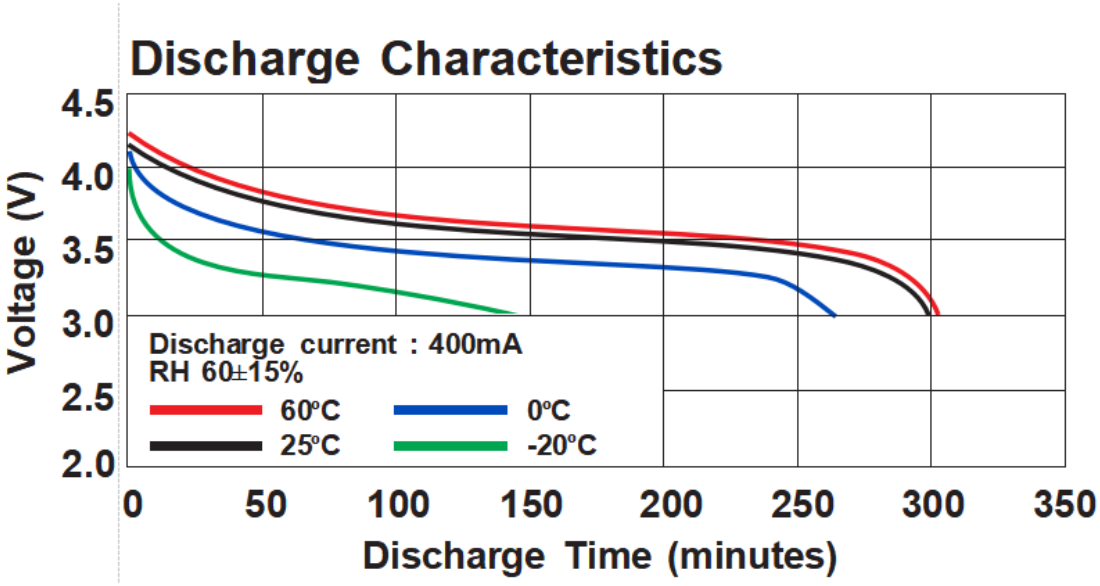

ANNOUNCEMENT

- Use high quality battery connectors. Using connectors that do not fit tightly into the battery socket may result in overheating and melting of the battery case. Remove the connectors from the battery after EVERY use and during storage. Failure to do so will result in plug fatigue resulting in a bad connection and possible case melting. Replace connectors frequently to preserve good connections.
- Store lithium batteries in a dedicated, vented fire-rated cabinet. Keep combustible materials clear of the cabinet. Label cabinet as containing lithium batteries.
- A 5s4p battery pack means that the pack contains 5 cells in a series circuit and 4 cells in a parallel circuit. Since each cell is 3.7v (nominal) a 5s LiPo battery has a nominal voltage of 18.5V, a fully charged voltage of 21.0V and a maximum discharged voltage of 15.0V before damage occurs.
- Store in a temperature protected area between 10 and 25 degrees Centigrade
- Do not charge a Lipo battery mat has 'ballooned' or 'puffed up', or shows any signs of leakage or physical damage.
- Never charge a very hot battery as this may cause an explosion or fire.
- Avoid using chargers with long charging times.
- Before starting work,ensure that a written experimental protocol including safety information is available.
- Never disassemble, modify, puncture, mechanically shock, or short circuit the battery. Leakage, smoke emission, ignition, explosion, or fire, which may result in personal injury and property damage, can occur.
- Ensure that charging leads are connected correctly. Reverse charging can lead to cell damage, fire or explosion.

- If the battery swells during charging, stop charging immediately and disconnect the battery from the charger. Leave the battery outside for a few hours and observe.