3.7V Lithium Polymer Battery Data Sheet

Model: 353856

Please Find More:

https://www.fpbattery.com/3-7v-650mah-lithium-polymer-battery/

File Number: A/FP3856-11722

File Version: 01

CONTACT

CUSTOMER SERVICE
86.755.3682.7358
sales@fpbattery.com
Hours of Operation:
9:00am-6:00pm CST, Monday to Friday

LEARN MORE ON:
https://www.fpbattery.com/

DNK POWER COMPANY LIMITED

BATTERY SPECIFICATION

Part Number	DNK 353856
Nominal Voltage	3.7 V
Nominal Capacity	745 mAh
Internal Impedence	<60mΩ
Charge Voltage	4.2V
Recommended Charge Current	0.2 C
Allowed Max Charge Current	0.5 C
Output Voltage Range	4.2 - 2.5 V
Recommended Discharge Current	0.2 C
Max Continuous Discharge Current	1 C
Pulse Discharge Current	3 C (10 mS)
Discharge Cut-off Voltage	2.5± 0.05V
Cycle Life to 80% Health	500 (0.2C, 25°C)

1 YEAR WARRANTY

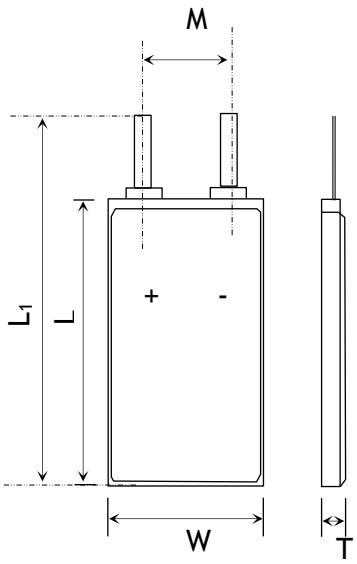

Item	Parameter (mm)
T	3
W	38
M	10
L	56
L_1	58
BL	58 ± 1
CL	100

ENVIRONMENTAL SPECIFICATIONS

Charging Temperature Range	0 - 45°C
Discharging Temperature Range	-20 - 60°C
Storage Period 1 Week	-20 - 45°C
Storage Period 1 Month	-10 - 45°C
Storage Period 6 Months	0 - 35°C

BATTERY PROTECTION

Over Charge	4.275 ± 50mV
Over Discharge	2.5V ± 50mV
Over Current	3A to 5A
Short Circuit	Yes

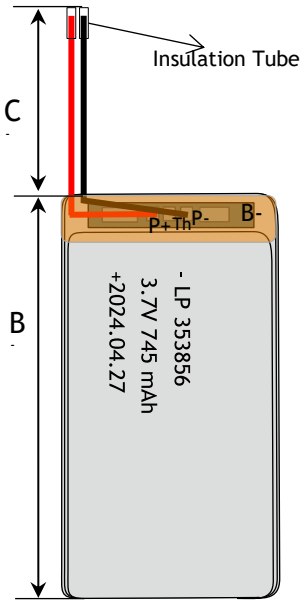

MECHANICAL SPECIFICATIONS

Dimensions	58x 38 x 3 mm(L*W*T)
Weight	Around 12 g
Battery Terminals	WC/ FL *

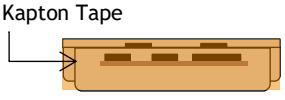

CERTIFICATION

Certification Approval	PLEASE CONSULT SALES

* WC=With Connector FL=Flying Leads UWP=Blue Wrapped PVC BWP=Black Wrapped PVC BC= Bare Cell

RELATIVE CURVES

Charge Characteristics

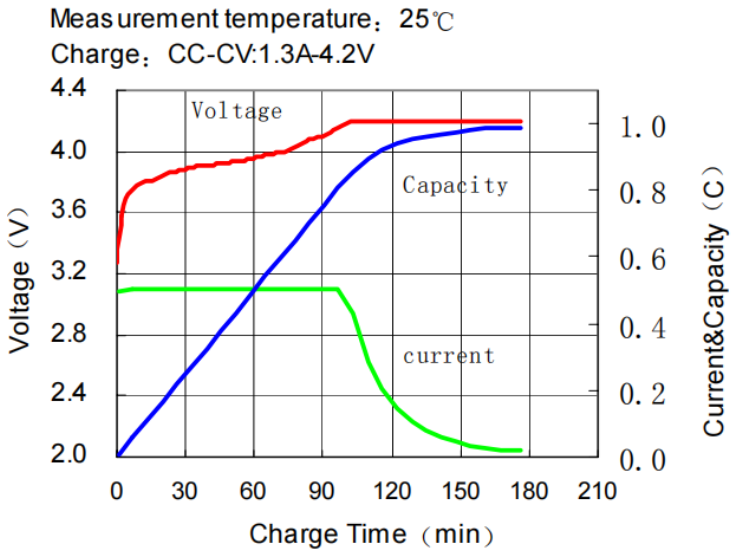

Rate Discharge Characteristics

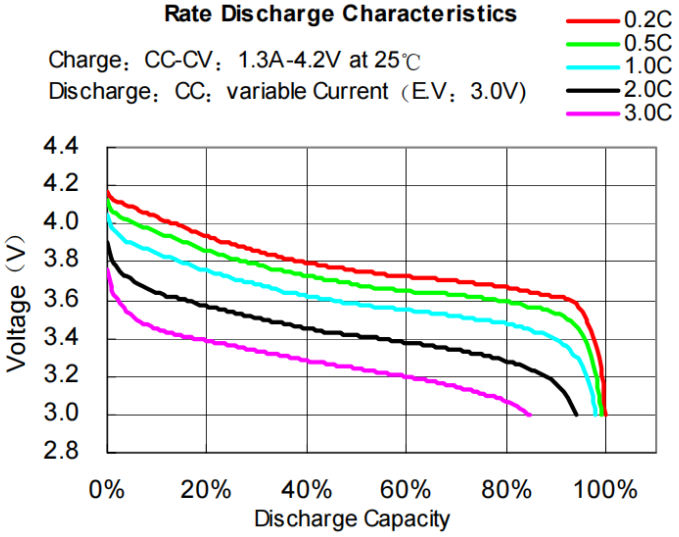

ANNOUNCEMENT

- ALWAYS use the "Balance Charge" setting on your charger. If your charger does not have this feature then don't use it and invest in one that does.
- The battery must be discharged at less than the maximum discharge current specified in the battery instruction manual. High discharging current may reduce the discharging capacity significantly or cause over-heat.
- Never discharge the battery cells below 3.2V.
- ALWAYS locate exits and evacuation routes in your area. Know the location of portable fire extinguishers in the area, and the location of the nearest fire alarm pull station (if the building is equipped with a fire alarm system).
- Always verify voltage of Batteries before use, this is especially important for packs that have been out of service for greater than six (months.
- Charging current should be less than maximum charge current specified in the Product Specification.
- Although protective electronics built into the battery should prevent overcharging, such a battery management system can fail- for example if the charger is not suitable and thus unattended charging is always a source of danger.
- Always store LiPo pack in a safe and nonGcombustible container away from flammable/combustible materials.
- ALWAYS consider using a “Lipo Guard” or a similar protective pouch while charging LiIon and LiPo batteries (this type of pouch will contain a small fire should the battery bulge or personal laptop computers by individuals.) experience a thermal runaway event, protecting nearby items against ignition. *Note: this recommendation is not intended to apply to routine charging and use of
- Never remove the battery from its protective plastic case.
- Never discharge your Li-Po battery below the Lowest Discharge Voltage. This may cause irreversible damage which will deteriorate battery performance and cycle life. An ESC with an adjustable low voltage cutoff is MANDATORY!