3.7V Lithium Polymer Battery Data Sheet

Model: 353842

Please Find More:

https://www.fpbattery.com/3-7v-500mah-lithium-polymer-battery/

File Number: A/FP3842-4308

File Version: 01

CONTACT

CUSTOMER SERVICE
86.755.3682.7358
sales@fpbattery.com
Hours of Operation:
9:00am-6:00pm CST, Monday to Friday

LEARN MORE ON:
https://www.fpbattery.com/

DNK POWER COMPANY LIMITED

BATTERY SPECIFICATION

Part Number	DNK 353842
Nominal Voltage	3.7 V
Nominal Capacity	560 mAh
Internal Impedence	<60mΩ
Charge Voltage	4.2V
Recommended Charge Current	0.2 C
Allowed Max Charge Current	0.5 C
Output Voltage Range	4.2 - 2.5 V
Recommended Discharge Current	0.2 C
Max Continuous Discharge Current	1 C
Pulse Discharge Current	3 C (10 mS)
Discharge Cut-off Voltage	2.5± 0.05V
Cycle Life to 80% Health	500 (0.2C, 25°C)

1

1 YEAR WARRANTY

Inflex and soler

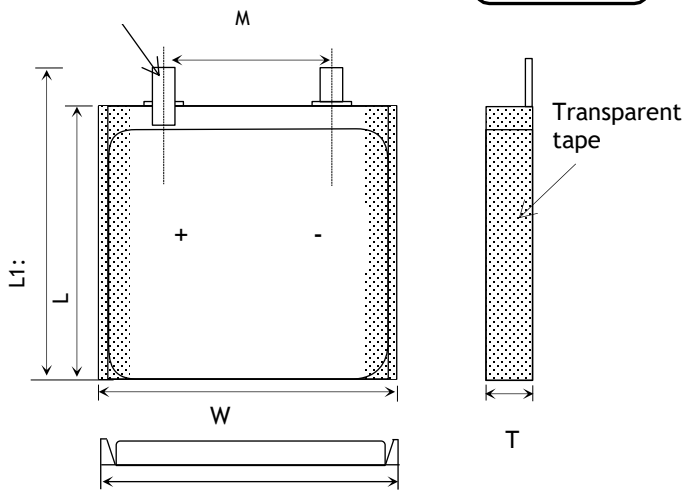

Item	Parameter (mm)
T	3
W	38
M	10
L	42
L_1	44
BL	44 ± 1
CL	100

ENVIRONMENTAL SPECIFICATIONS

Charging Temperature Range	0 - 45°C
Discharging Temperature Range	-20 - 60°C
Storage Period 1 Week	-20 - 45°C
Storage Period 1 Month	-10 - 45°C
Storage Period 6 Months	0 - 35°C

BATTERY PROTECTION

Over Charge	4.275 ± 50mV
Over Discharge	2.5V ± 50mV
Over Current	3A to 5A
Short Circuit	Yes

MECHANICAL SPECIFICATIONS

Dimensions	44x 38 x 3 mm(L*W*T)
Weight	Around 9 g
Battery Terminals	WC/ FL *

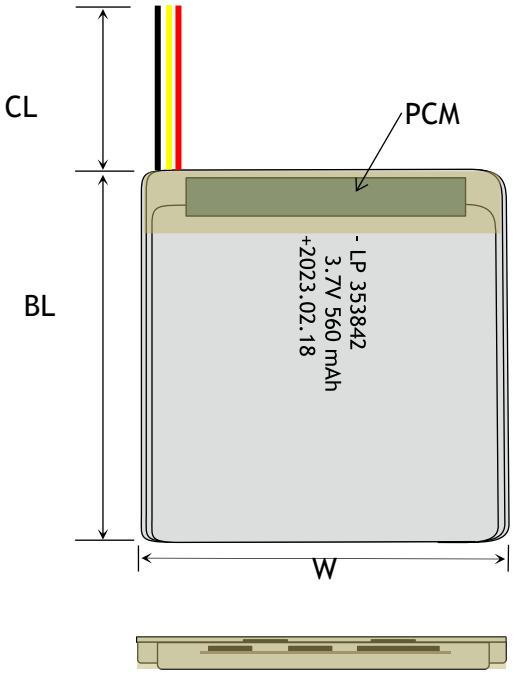

CERTIFICATION

Certification Approval	PLEASE CONSULT SALES

* aWC=With Connector FL=Flying Leads UWP=Blue Wrapped PVC
BWP=Black Wrapped PVC BC= Bare Cell

BULK PRODUCTION ACTUAL PICTURES



BARE CELL (BC)



FLYING LEADS (FL)



WITH CONNECTOR (WC)



BLUE WRAPPED PVC (UWP)



BLACK WRAPPED PVC (BWP)

3.7V LIPO BATTERY OPTIONS



Special Ingredients to make batteries work from -40 -85 ° C



Discharging Current up to 100C



Popular JST,Molex,Hirose,Anderson available



LED Power Indicator



Power Button



Upgrade to LifePo4 tech and life circle up to 1500

RELATIVE CURVES

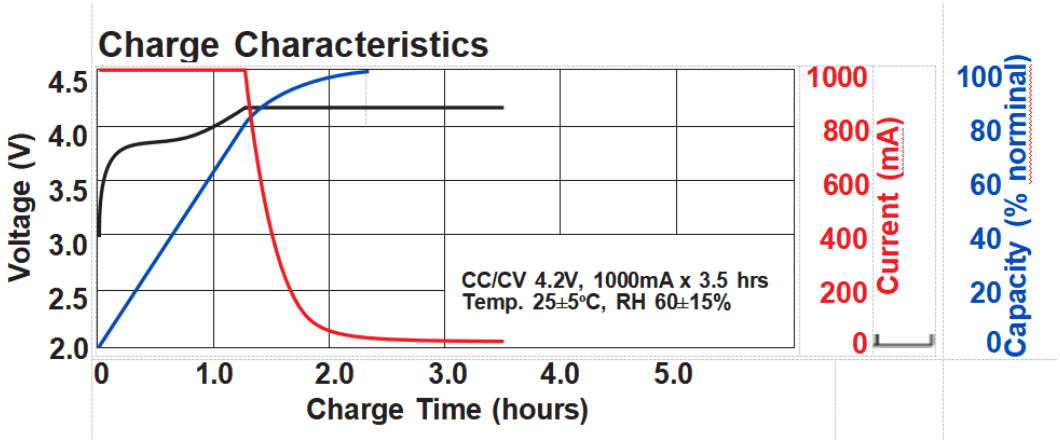

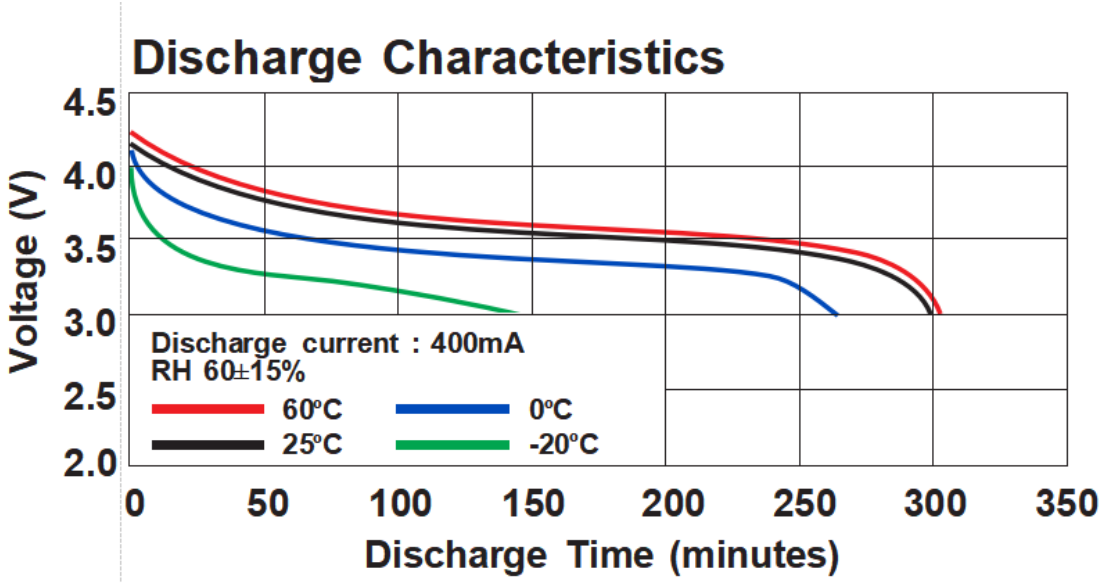

ANNOUNCEMENT

- Never leave a battery unattended while charging. Only charge LiPo batteries with chargers specifically designed to charge LiPo batteries. NEVER use a NiMH or NiCd charger. Battery temperatures should not be allowed to fall below 32˚F (0˚C) or exceed 113˚F (45˚C) .
- If the electrolyte in the cells gets on your skin, wash the area thoroughly with soap and water. If it gets in your eyes, rinse at emergency eyewash station for 15 minutes with cool water and seek immediate medical attention.
- If the electrolyte in the cells gets on your skin, wash the area thoroughly with soap and water. If it gets in your eyes, rinse at emergency eyewash station for 15 minutes with cool water and seek immediate medical attention.
- Store LiPo batteries at room temperature between 5ºC and 27ºC (40ºF and 80ºF) for best results. The lower the temperature the better.
- Do not charge hot cells after use. Warm cells are OK. Always let hot cells cool before charging.
- When replacing batteries, make sure to use batteries of the same type, size and brand.
- Avoid crushing or excessive pressure on the battery.
- Before starting work,ensure that a written experimental protocol including safety information is available.
- Do not store LiPo batteries in extreme temperatures below 0C or above 50C.
- Intact batteries can be disposed of as Universal Waste. If the battery is greater than 9V, tape the terminals before disposal.
- Avoid using unauthorized charging devices.