3.7V Lithium Polymer Battery Data Sheet

Model: 353463

Please Find More:

https://www.fpbattery.com/3-7v-750mah-lithium-polymer-battery/

File Number: A/FP3463-17517

File Version: 01

CONTACT

CUSTOMER SERVICE
86.755.3682.7358
sales@fpbattery.com
Hours of Operation:
9:00am-6:00pm CST, Monday to Friday

LEARN MORE ON:
https://www.fpbattery.com/

DNK POWER COMPANY LIMITED

BATTERY SPECIFICATION

Part Number	DNK 353463
Nominal Voltage	3.7 V
Nominal Capacity	750 mAh
Internal Impedence	<60mΩ
Charge Voltage	4.2V
Recommended Charge Current	0.2 C
Allowed Max Charge Current	0.5 C
Output Voltage Range	4.2 - 2.5 V
Recommended Discharge Current	0.2 C
Max Continuous Discharge Current	1 C
Pulse Discharge Current	3 C (10 mS)
Discharge Cut-off Voltage	2.5± 0.05V
Cycle Life to 80% Health	500 (0.2C, 25°C)

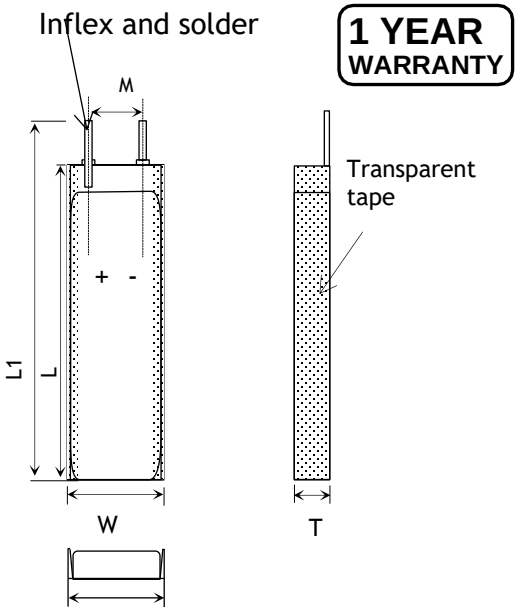

Item	Parameter (mm)
T	3
W	34
M	10
L	63
L_1	65
BL	65 ± 1
CL	100

ENVIRONMENTAL SPECIFICATIONS

Charging Temperature Range	0 - 45°C
Discharging Temperature Range	-20 - 60°C
Storage Period 1 Week	-20 - 45°C
Storage Period 1 Month	-10 - 45°C
Storage Period 6 Months	0 - 35°C

BATTERY PROTECTION

Over Charge	4.275 ± 50mV
Over Discharge	2.5V ± 50mV
Over Current	3A to 5A
Short Circuit	Yes

MECHANICAL SPECIFICATIONS

Dimensions	65x 34 x 3 mm(L*W*T)
Weight	12 g
Battery Terminals	WC/ FL *

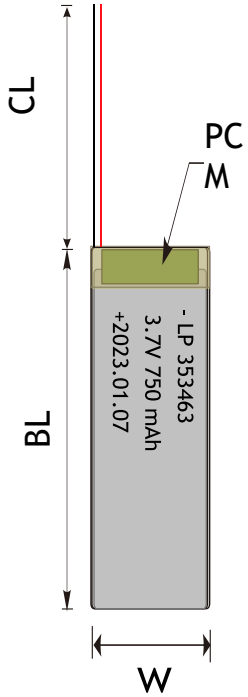

CERTIFICATION

Certification Approval	PLEASE CONSULT SALES

* WC=With Connector FL=Flying Leads UWP=Blue Wrapped PVC BWP=Black Wrapped PVC BC= Bare Cell

RELATIVE CURVES

Discharge Characteriestics Curve in Different Rate@25℃

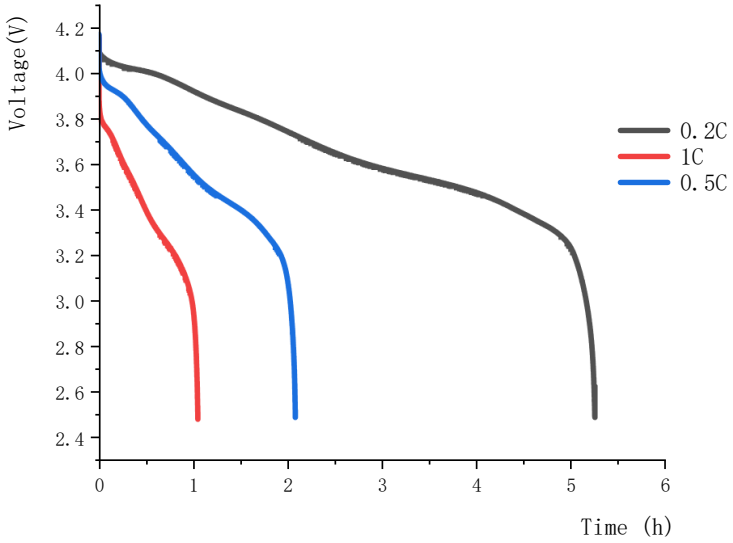

Charge & Discharge Characteriestics in different Rate@25℃

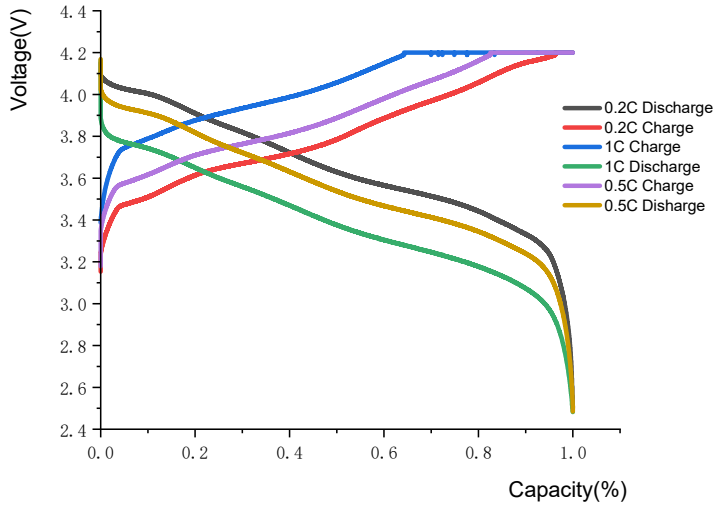

ANNOUNCEMENT

- If you notice hot cells, disconnect the charger and remove any external short circuit if present.
- Always charge Batteries in an open area away from flammable materials, liquids and surfaces.
- If the battery develops an abnormal condition, stop using it immediately.
- When using the adapter, make sure that the voltage and current requirements are met.
- Do not store LiPo batteries in extreme temperatures below 0C or above 50C.
- Avoid bending or twisting the battery.
- If you notice your LiPo battery pack is swelling while charging, stop the charging process immediately, put the battery in a safe non-flammable metal container and observe it.
- Keep all batteries out of the reach of children.
- Never remove the battery from its protective plastic case.
- Do not charge dissimilar or un-matched packs in series or parallel with any difference in cell type, cell capacity, manufacturer, age, pack capacity or charge state (+/0.03V per cell). If in any doubt, always charge them separately.
- 3.6V~3.9V range. Always store your LiPo pack in a safe and non flammable container away from flammable objects.