3.7V Lithium Polymer Battery Data Sheet

Model: 353453

Please Find More:

https://www.fpbattery.com/3-7v-600mah-lithium-polymer-battery/

File Number: A/FP3453-13209

File Version: 01

CONTACT

CUSTOMER SERVICE
86.755.3682.7358
sales@fpbattery.com
Hours of Operation:
9:00am-6:00pm CST, Monday to Friday

LEARN MORE ON:
https://www.fpbattery.com/

DNK POWER COMPANY LIMITED

BATTERY SPECIFICATION

Part Number	DNK 353453
Nominal Voltage	3.7 V
Nominal Capacity	630 mAh
Internal Impedence	<60mΩ
Charge Voltage	4.2V
Recommended Charge Current	0.2 C
Allowed Max Charge Current	0.5 C
Output Voltage Range	4.2 - 2.5 V
Recommended Discharge Current	0.2 C
Max Continuous Discharge Current	1 C
Pulse Discharge Current	3 C (10 mS)
Discharge Cut-off Voltage	2.5± 0.05V
Cycle Life to 80% Health	500 (0.2C, 25°C)

1

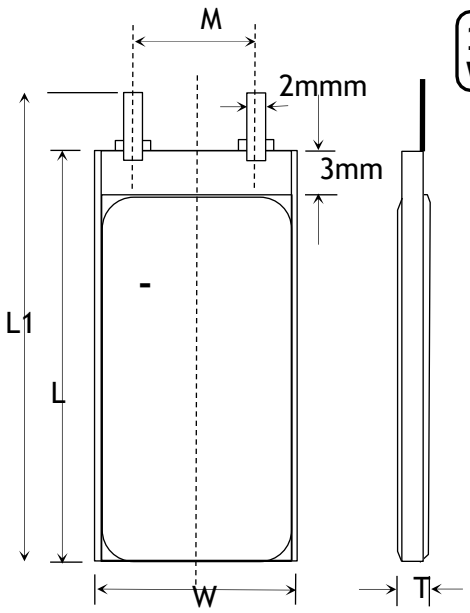

1 YEAR WARRANTY

Item	Parameter (mm)
T	3
W	34
M	10
L	53
L_1	55
BL	55 ± 1
CL	100

ENVIRONMENTAL SPECIFICATIONS

Charging Temperature Range	0 - 45°C
Discharging Temperature Range	-20 - 60°C
Storage Period 1 Week	-20 - 45°C
Storage Period 1 Month	-10 - 45°C
Storage Period 6 Months	0 - 35°C

BATTERY PROTECTION

Over Charge	4.275 ± 50mV
Over Discharge	2.5V ± 50mV
Over Current	3A to 5A
Short Circuit	Yes

MECHANICAL SPECIFICATIONS

Dimensions	55x 34 x 3 mm(L*W*T)
Weight	Around 10 g
Battery Terminals	WC/ FL *

CERTIFICATION

Certification Approval	PLEASE CONSULT SALES

* WC=With Connector FL=Flying Leads UWP=Blue Wrapped PVC BWP=Black Wrapped PVC BC= Bare Cell

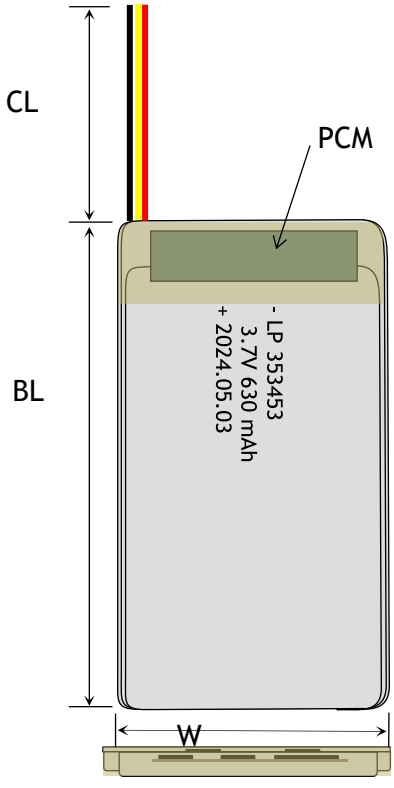

RELATIVE CURVES

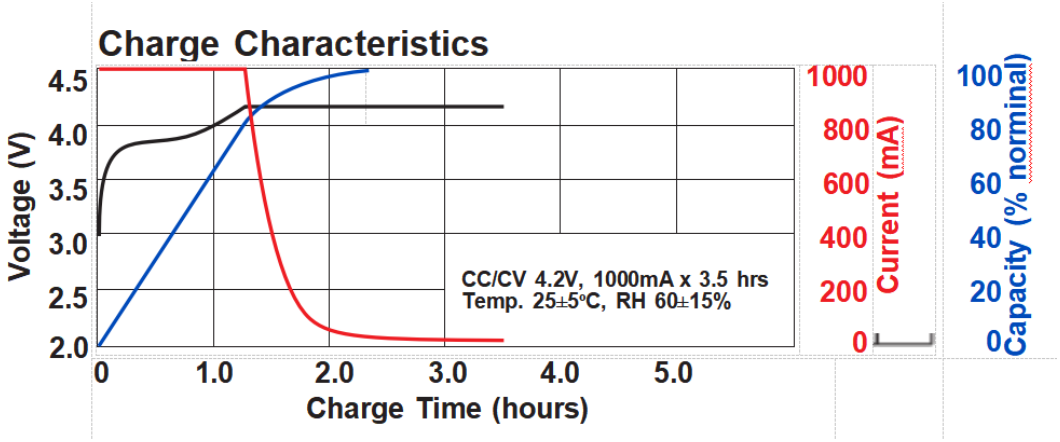

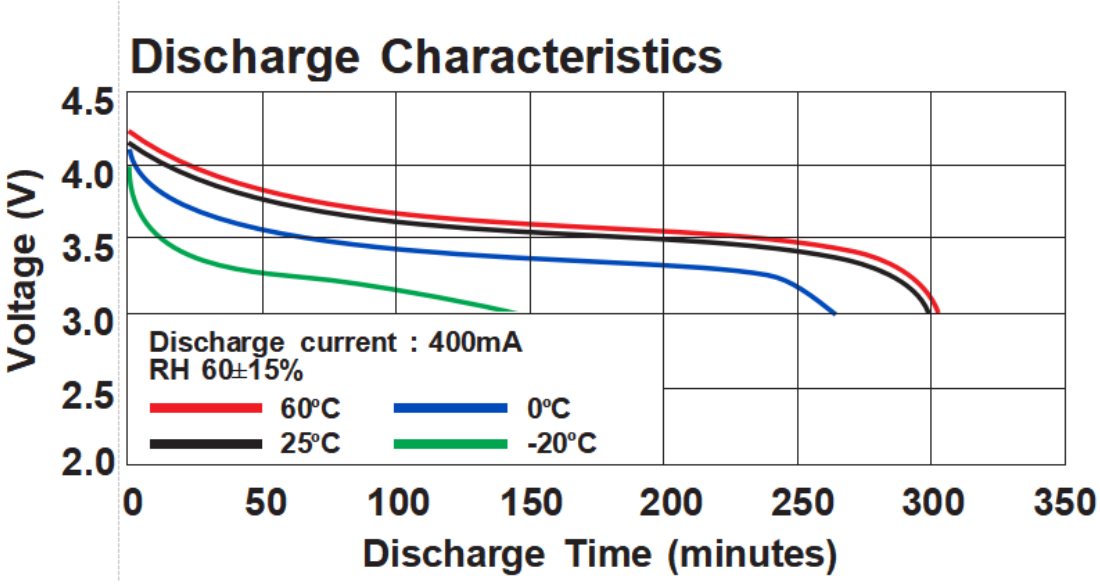

ANNOUNCEMENT

- Avoid crushing or excessive pressure on the battery.
- Obtain recycling container from EHRS for all batteries except LiPo.
- Batteries should not be carried in pockets as coins, keys and similar metal items can cause shorting leading to overheating, burns or ignition.
- If a remote device is not available, do not handle the cell for a period of at least 24 hours.
- When not using your LiPo/Li-ion battery pack, store it at 60-70% of the pack's rated capacity. Lithium-ion cells should never be stored fully charged, it is suggested to store them with a voltage around 3.8V. Most of the chargers have a "storage mode" that will either charge or discharge the cell to the proper storage voltage. Experts recommend to put the cells in storage mode after every run, this will help the battery to lengthen the usable life span
- The battery must be protected from physical contact with any other part of the model.
- Test equipment for short circuits prior to installing batteries.
- Avoid prolonged use of the battery until depleted.
- Set up emergency battery isolation container.
- Never charge a damaged or inflated battery.
- Always use a compatible balanced mode charger, specifically designed for the chemistry of battery you are using.