3.7V Lithium Polymer Battery Data Sheet

Model: 353448

Please Find More:

https://www.fpbattery.com/3-7v-500mah-lithium-polymer-battery/

File Number: A/FP3448-10652

File Version: 01

CONTACT

CUSTOMER SERVICE
86.755.3682.7358
sales@fpbattery.com
Hours of Operation:
9:00am-6:00pm CST, Monday to Friday

LEARN MORE ON:
https://www.fpbattery.com/

DNK POWER COMPANY LIMITED

BATTERY SPECIFICATION

Part Number	DNK 353448
Nominal Voltage	3.7 V
Nominal Capacity	570 mAh
Internal Impedence	<60mΩ
Charge Voltage	4.2V
Recommended Charge Current	0.2 C
Allowed Max Charge Current	0.5 C
Output Voltage Range	4.2 - 2.5 V
Recommended Discharge Current	0.2 C
Max Continuous Discharge Current	1 C
Pulse Discharge Current	3 C (10 mS)
Discharge Cut-off Voltage	2.5± 0.05V
Cycle Life to 80% Health	500 (0.2C, 25°C)

1

ENVIRONMENTAL SPECIFICATIONS

Charging Temperature Range	0 - 45°C
Discharging Temperature Range	-20 - 60°C
Storage Period 1 Week	-20 - 45°C
Storage Period 1 Month	-10 - 45°C
Storage Period 6 Months	0 - 35°C

BATTERY PROTECTION

Over Charge	4.275 ± 50mV
Over Discharge	2.5V ± 50mV
Over Current	3A to 5A
Short Circuit	Yes

MECHANICAL SPECIFICATIONS

Dimensions	50x 34 x 3 mm(L*W*T)
Weight	Around 9 g
Battery Terminals	WC/ FL *

CERTIFICATION

Certification Approval	PLEASE CONSULT SALES

* WC=With Connector FL=Flying Leads UWP=Blue Wrapped PVC BWP=Black Wrapped PVC BC= Bare Cell

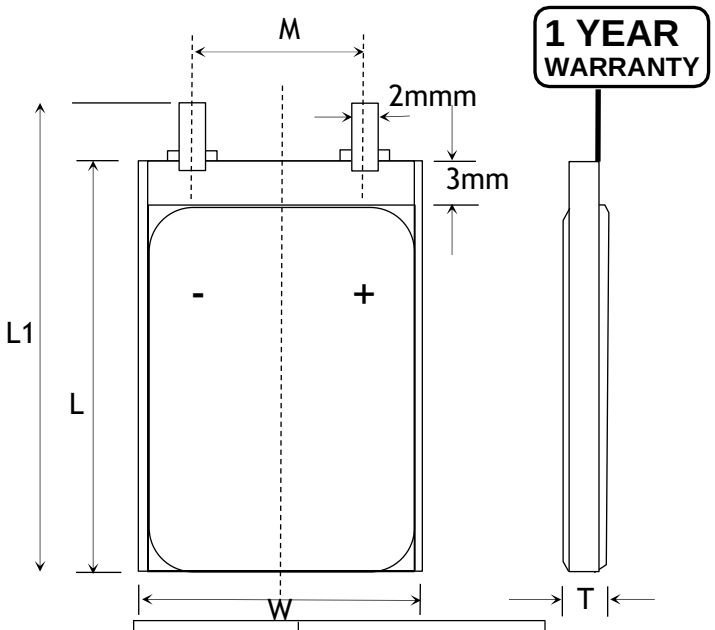

Item	Parameter (mm)
T	3
W	34
M	10
L	48
L_1	50
BL	50 ± 1
CL	100

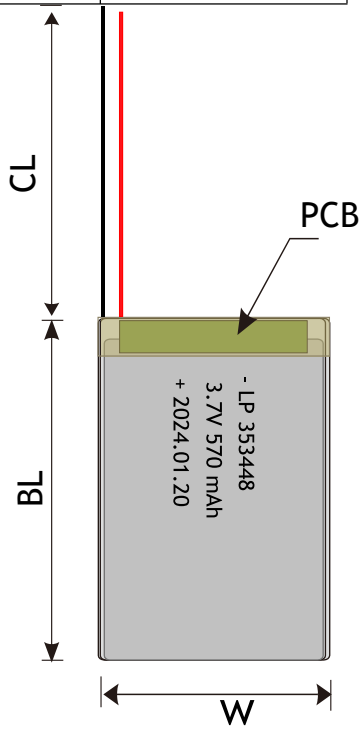

BULK PRODUCTION ACTUAL PICTURES



BARE CELL (BC)



FLYING LEADS (FL)



WITH CONNECTOR (WC)



BLUE WRAPPED PVC (UWP)



BLACK WRAPPED PVC (BWP)

3.7V LIPO BATTERY OPTIONS

Special Ingredients to make batteries work from -40 -85 ° C

Discharging Current up to 100C

Popular JST,Molex,Hirose,Anderson available





LED Power Indicator



Power Button

Upgrade to LifePo4 tech and life circle up to 1500

RELATIVE CURVES

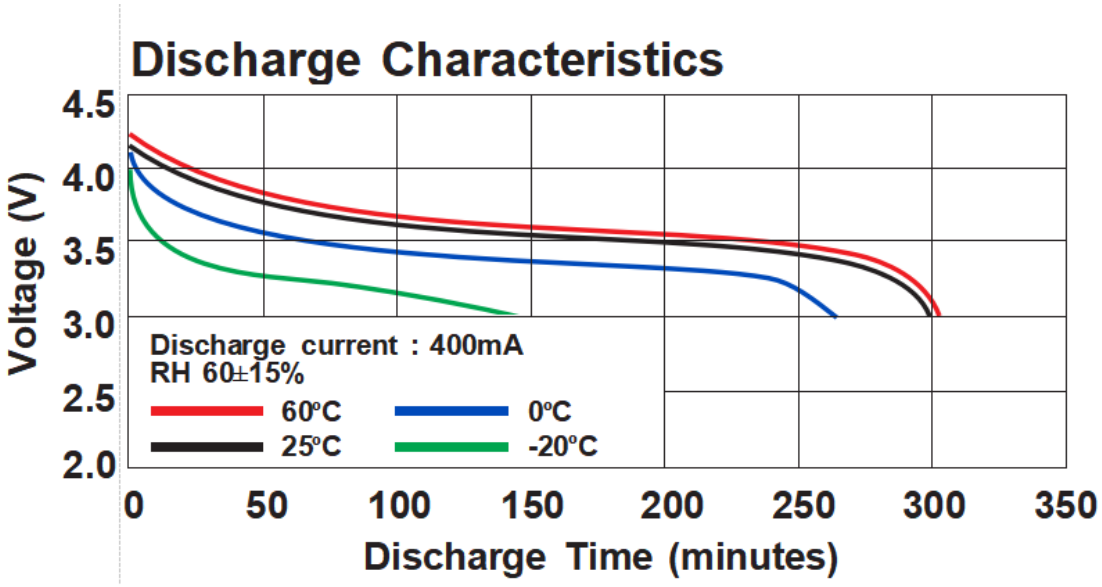

ANNOUNCEMENT

- Discharging capacity can't exceed 80% of the max capacity after full charging to ensure a good cycle performance
- Always store LiPo pack in a safe and nonGcombustible container away from flammable/combustible materials.
- Have a class ABC or CO2 fire extinguisher nearby the storage area.
- Ensure that you choose a regular and reputable supplier before purchasing.
- Avoid prolonged use of higher power devices.
- If the battery swells during charging, stop charging immediately and disconnect the battery from the charger. Leave the battery outside for a few hours and observe. Then recycle the battery according to the instructions of your country/region.
- Connecting the LiPo Battery to the Charger (Read the Charger Instructions)
- Always use a compatible balanced mode charger, specifically designed for the chemistry of battery you are using.
- LiPo safe bags help contain heat and flames that results if a Li-Ion battery combusts during charging or while in storage.
- When replacing batteries, make sure to use batteries of the same type, size and brand.
- Never charge a LiPo battery on a wooden or other combustible (carpeted) surface. Always charge LiPo batteries on surfaces made of cement, steel, ceramic or stone.