3.7V Lithium Polymer Battery Data Sheet

Model: 353443

Please Find More:

https://www.fpbattery.com/3-7v-500mah-lithium-polymer-battery/

File Number: A/FP3443-7740

File Version: 01

CONTACT

CUSTOMER SERVICE
86.755.3682.7358
sales@fpbattery.com
Hours of Operation:
9:00am-6:00pm CST, Monday to Friday

LEARN MORE ON:
https://www.fpbattery.com/

DNK POWER COMPANY LIMITED

BATTERY SPECIFICATION

Part Number	DNK 353443
Nominal Voltage	3.7 V
Nominal Capacity	510 mAh
Internal Impedence	<60mΩ
Charge Voltage	4.2V
Recommended Charge Current	0.2 C
Allowed Max Charge Current	0.5 C
Output Voltage Range	4.2 - 2.5 V
Recommended Discharge Current	0.2 C
Max Continuous Discharge Current	1 C
Pulse Discharge Current	3 C (10 mS)
Discharge Cut-off Voltage	2.5± 0.05V
Cycle Life to 80% Health	500 (0.2C, 25°C)

1

Inflex and soler

1 YEAR WARRANTY

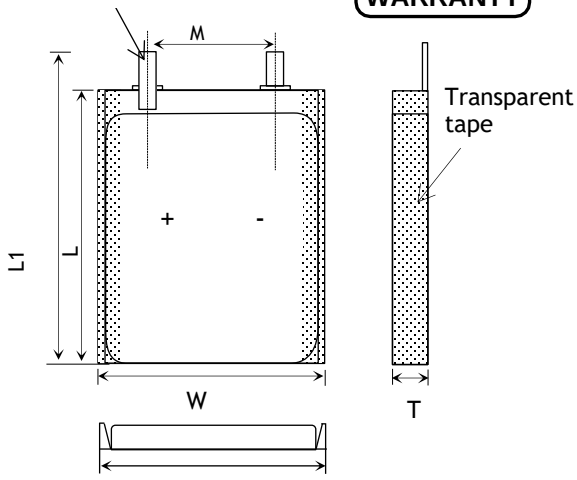

Item	Parameter (mm)
T	3
W	34
M	10
L	43
L_1	45
BL	45 ± 1
CL	100

ENVIRONMENTAL SPECIFICATIONS

Charging Temperature Range	0 - 45°C
Discharging Temperature Range	-20 - 60°C
Storage Period 1 Week	-20 - 45°C
Storage Period 1 Month	-10 - 45°C
Storage Period 6 Months	0 - 35°C

BATTERY PROTECTION

Over Charge	4.275 ± 50mV
Over Discharge	2.5V ± 50mV
Over Current	3A to 5A
Short Circuit	Yes

MECHANICAL SPECIFICATIONS

Dimensions	45x 34 x 3 mm(L*W*T)
Weight	8 g
Battery Terminals	WC/ FL *

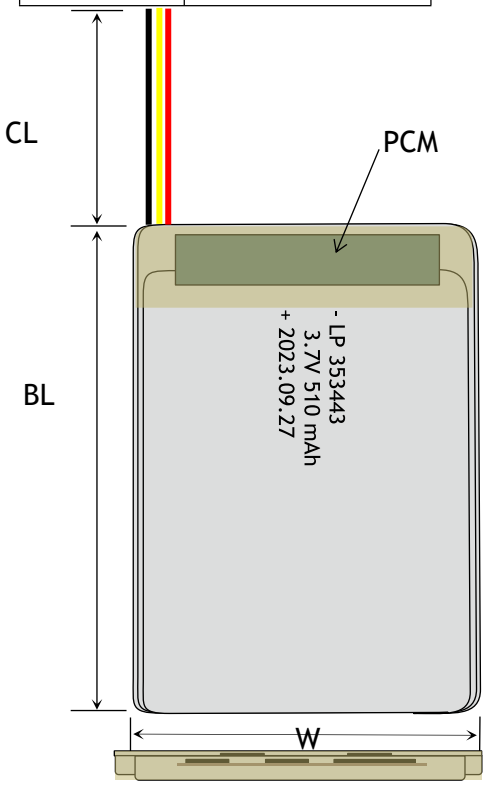

CERTIFICATION

Certification Approval	PLEASE CONSULT SALES

* WC=With Connector FL=Flying Leads UWP=Blue Wrapped PVC
BWP=Black Wrapped PVC BC= Bare Cell

RELATIVE CURVES

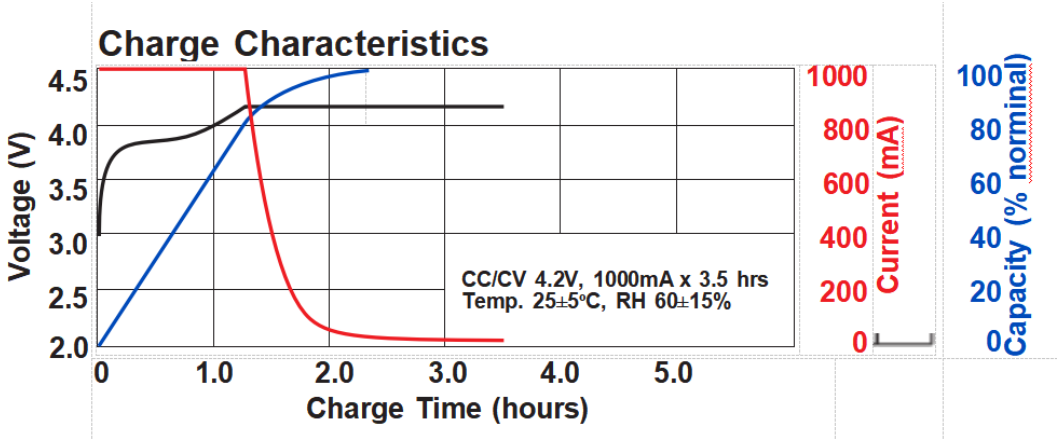

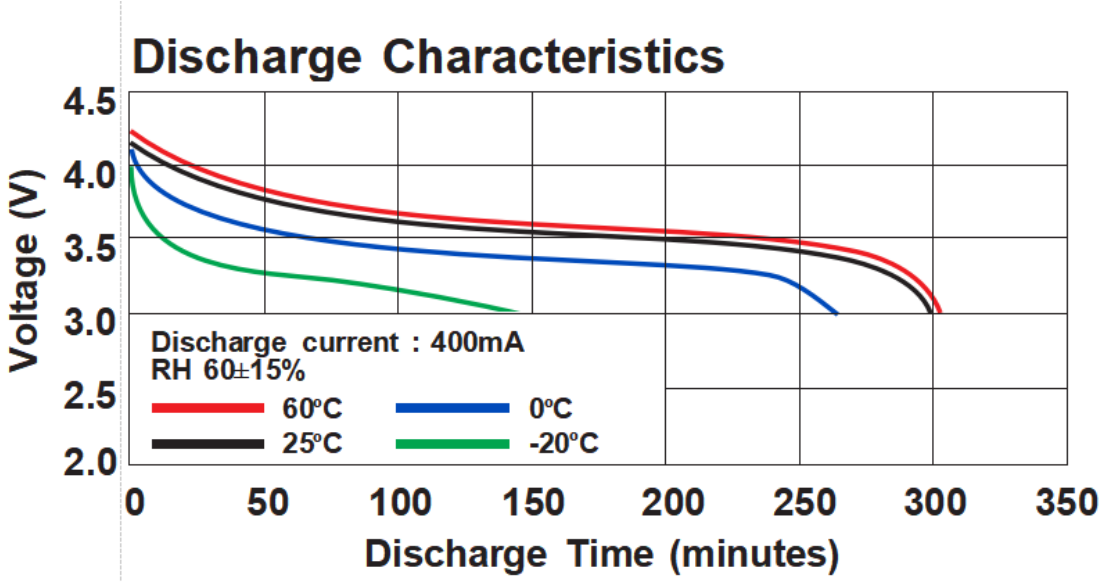

ANNOUNCEMENT

- Do not throw the battery in a fire.
- When using the adapter, make sure that the voltage and current requirements are met.
- During transportation and storage, ensure effective measures are employed to prevent shortcircuit.
- NEVER attempt to charge a one-time-use (non-rechargeable) Li-Ion or LiPo battery.
- The cells shall never be soaked with liquids such as water, seawater drinks such as soft drinks, juices coffee or others.
- Never expose Batteries to extreme temperatures or direct sunlight. The temperature range must be between 40-120° F (4-49° C).
- Always check that batteries are physically and electrically undamaged before charging or discharging.
- Monitor storage by means of suitable fire alarm
- Always charge the LiPo battery outdoors or in a ventilated area away from flammable objects and surfaces.
- Do not reverse the polarity.
- When selecting the cell count or voltage for charging purposes, select the cell count and voltage as it appears on the battery label. As a safety precaution, please confirm that the information printed on the battery or label is correct. (Please refer to Chart 1). Selecting the wrong cell count or charging voltage may cause fire.