3.7V Lithium Polymer Battery Data Sheet

Model: 353353

Please Find More:

https://www.fpbattery.com/3-7v-600mah-lithium-polymer-battery/

File Number: A/FP3353-14105

File Version: 01

CONTACT

CUSTOMER SERVICE
86.755.3682.7358
sales@fpbattery.com
Hours of Operation:
9:00am-6:00pm CST, Monday to Friday

LEARN MORE ON:
https://www.fpbattery.com/

DNK POWER COMPANY LIMITED

BATTERY SPECIFICATION

Part Number	DNK 353353
Nominal Voltage	3.7 V
Nominal Capacity	610 mAh
Internal Impedence	<60mΩ
Charge Voltage	4.2V
Recommended Charge Current	0.2 C
Allowed Max Charge Current	0.5 C
Output Voltage Range	4.2 - 2.5 V
Recommended Discharge Current	0.2 C
Max Continuous Discharge Current	1 C
Pulse Discharge Current	3 C (10 mS)
Discharge Cut-off Voltage	2.5± 0.05V
Cycle Life to 80% Health	500 (0.2C, 25°C)

1

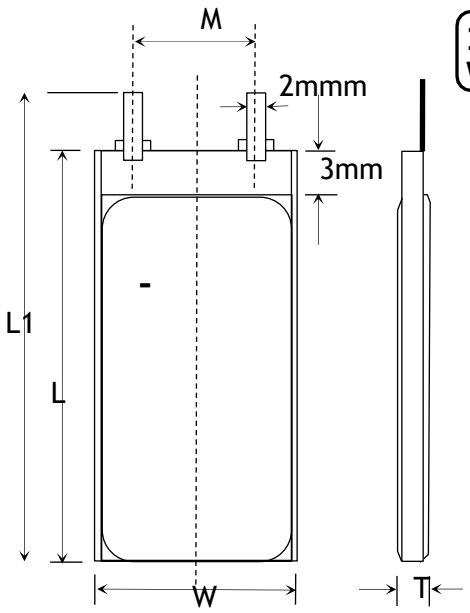

1 YEAR WARRANTY

Item	Parameter (mm)
T	3
W	33
M	10
L	53
L_1	55
BL	55 ± 1
CL	100

ENVIRONMENTAL SPECIFICATIONS

Charging Temperature Range	0 - 45°C
Discharging Temperature Range	-20 - 60°C
Storage Period 1 Week	-20 - 45°C
Storage Period 1 Month	-10 - 45°C
Storage Period 6 Months	0 - 35°C

BATTERY PROTECTION

Over Charge	4.275 ± 50mV
Over Discharge	2.5V ± 50mV
Over Current	3A to 5A
Short Circuit	Yes

MECHANICAL SPECIFICATIONS

Dimensions	55x 33 x 3 mm(L*W*T)
Weight	Around 10 g
Battery Terminals	WC/ FL *

CERTIFICATION

Certification Approval	PLEASE CONSULT SALES

* WC=With Connector FL=Flying Leads UWP=Blue Wrapped PVC BWP=Black Wrapped PVC BC= Bare Cell

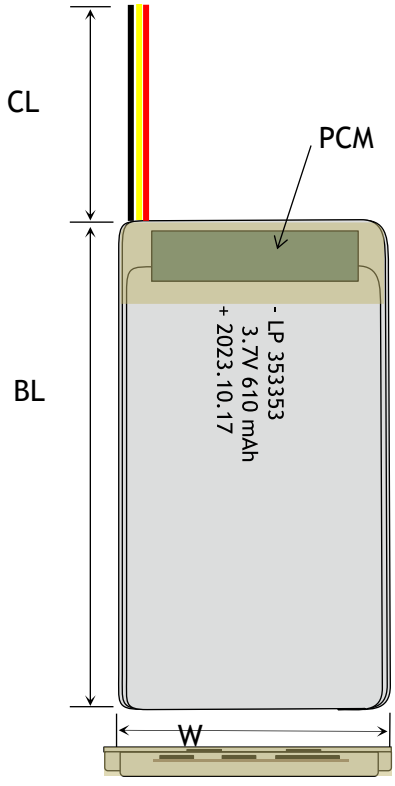

RELATIVE CURVES

0.2C Discharge Characteristics Curve

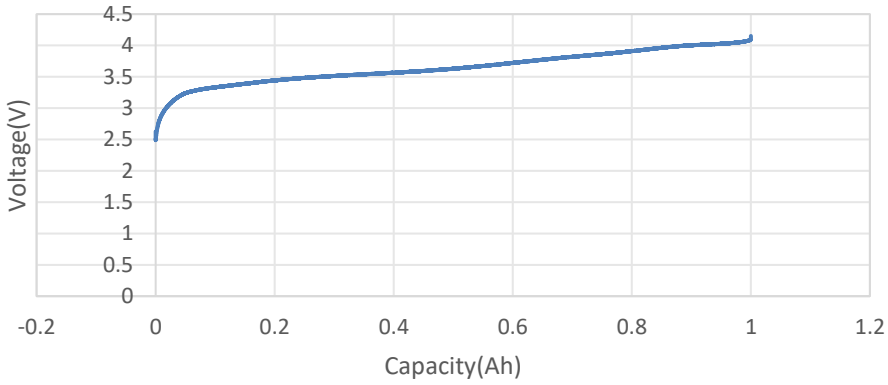

1C Discharge Characteristics Curves

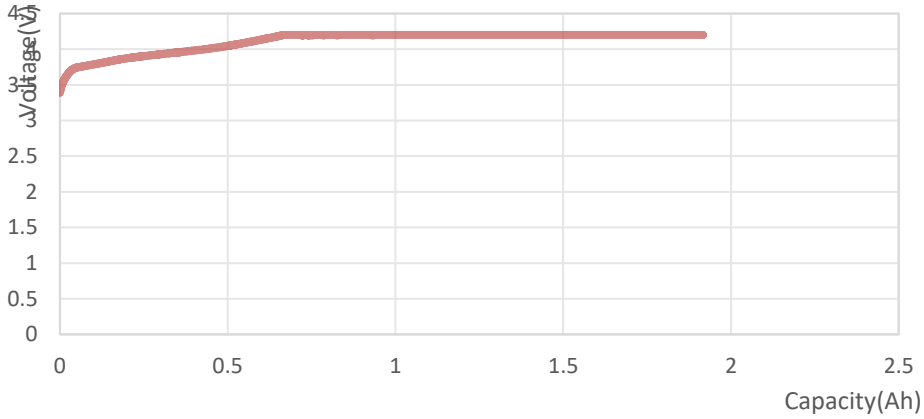

ANNOUNCEMENT

- Always use a compatible balanced mode charger, specifically designed for the chemistry of battery you are using.
- Always use a balancer board to charge LiPo Battery with more than 1 cell.
- All batteries should be stored, charged and used in accordance with the manufacturer's instructions.
- Never put batteries in your pocket or non fireproof bags this may cause the battery to short circuit.
- Do not open the battery system or modules unless you have a risk assessment, training and permission.
- Slow down the charging and discharging rate of the battery in low temperature environment.
- Always charge Batteries in an open area away from flammable materials, liquids and surfaces.
- ALWAYS constantly supervise LiPo batteries on charge and NEVER LEAVE UNATTENDED.
- Do not use the battery during charging to avoid overheating and safety accidents.
- A 1s or 1 cell LiPo battery has a nominal voltage of 3.7V. When fully charged it has a maximum voltage of 4.2V. When fully discharged, it should never go below 3.0V without risking cell damage.
- Do not dispose of the battery in the regular trash.