3.7V Lithium Polymer Battery Data Sheet

Model: 352852

Please Find More:

https://www.fpbattery.com/3-7v-500mah-lithium-polymer-battery/

File Number: A/FP2852-17566

File Version: 01

CONTACT

CUSTOMER SERVICE
86.755.3682.7358
sales@fpbattery.com
Hours of Operation:
9:00am-6:00pm CST, Monday to Friday

LEARN MORE ON:
https://www.fpbattery.com/

DNK POWER COMPANY LIMITED

BATTERY SPECIFICATION

Part Number	DNK 352852
Nominal Voltage	3.7 V
Nominal Capacity	510 mAh
Internal Impedence	<60mΩ
Charge Voltage	4.2V
Recommended Charge Current	0.2 C
Allowed Max Charge Current	0.5 C
Output Voltage Range	4.2 - 2.5 V
Recommended Discharge Current	0.2 C
Max Continuous Discharge Current	1 C
Pulse Discharge Current	3 C (10 mS)
Discharge Cut-off Voltage	2.5± 0.05V
Cycle Life to 80% Health	500 (0.2C, 25°C)

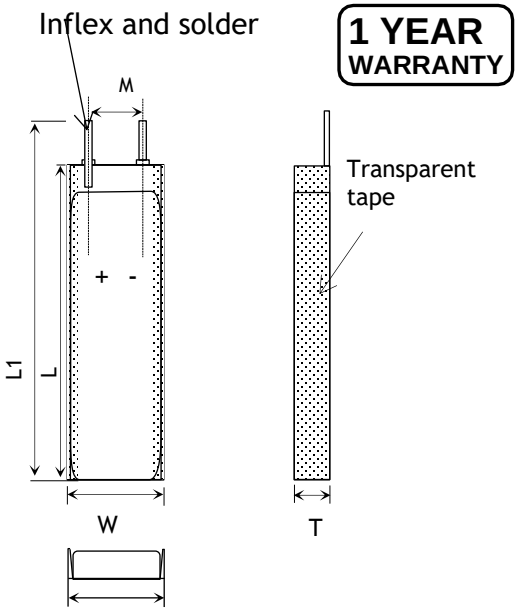

Item	Parameter (mm)
T	3
W	28
M	10
L	52
L_1	54
BL	54 ± 1
CL	100

ENVIRONMENTAL SPECIFICATIONS

Charging Temperature Range	0 - 45°C
Discharging Temperature Range	-20 - 60°C
Storage Period 1 Week	-20 - 45°C
Storage Period 1 Month	-10 - 45°C
Storage Period 6 Months	0 - 35°C

BATTERY PROTECTION

Over Charge	4.275 ± 50mV
Over Discharge	2.5V ± 50mV
Over Current	3A to 5A
Short Circuit	Yes

MECHANICAL SPECIFICATIONS

Dimensions	54x 28 x 3 mm(L*W*T)
Weight	8 g
Battery Terminals	WC/ FL *

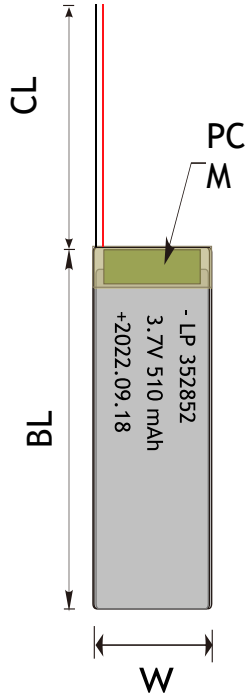

CERTIFICATION

Certification Approval	PLEASE CONSULT SALES

* WC=With Connector FL=Flying Leads UWP=Blue Wrapped PVC BWP=Black Wrapped PVC BC= Bare Cell

RELATIVE CURVES

Discharge Characteriestics Curve in Different Rate@25℃

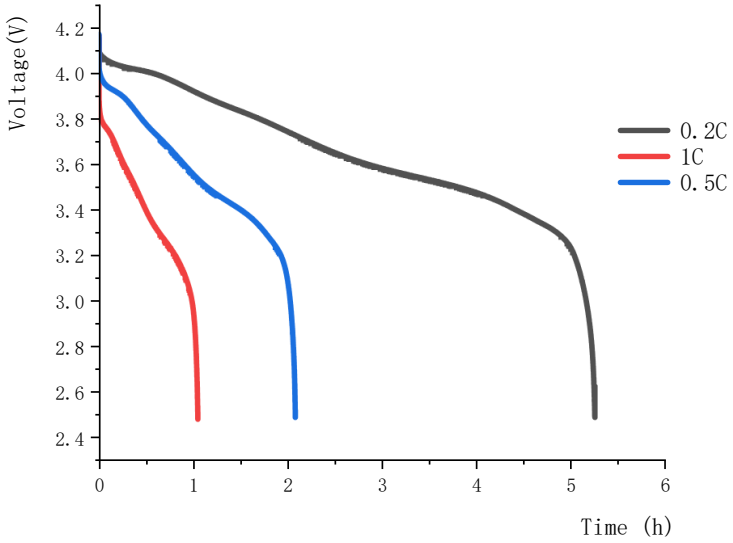

Charge & Discharge Characteriestics in different Rate@25℃

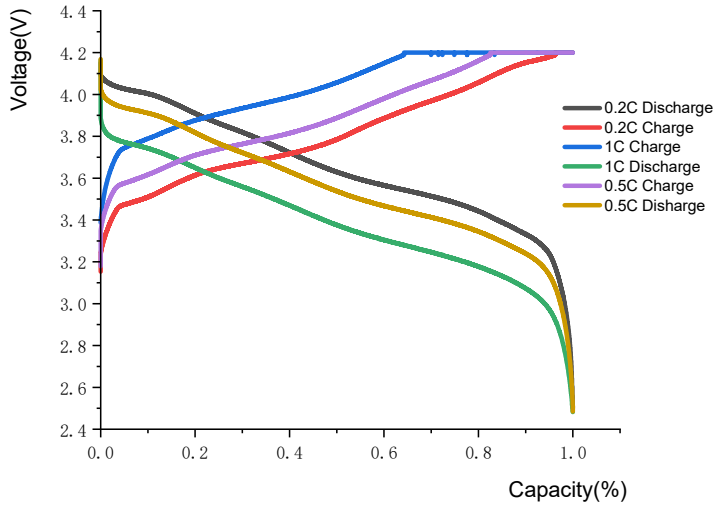

ANNOUNCEMENT

- During transportation and storage, ensure effective measures are employed to prevent shortcircuit.
- Never immerse the battery in water or allow it to get wet.
- Over-charging LiPo batteries will damage them and possibly cause a fire. (above 4.20V per cell is considered overcharged).
- NEVER put Li-Ion or LiPo batteries in the trash.
- Never charge a LiPo battery while inside your model.
- ALWAYS use the charging cord supplied with the device (or only use a replacement charging cord that is specified by the device manufacturer to bean approved alternative).
- Do not charge a Lipo battery mat has 'ballooned' or 'puffed up', or shows any signs of leakage or physical damage.
- Never expose Batteries to extreme temperatures or direct sunlight. The temperature range must be between 40-120° F (4-49° C).
- The batteries must be stored within -10°C~45°C range environmental condition.
- It is prohibited to disassemble a LiPo battery, this may generate a gas release or cause a fire
- Do not discharge you LiPo cells below 3.00V per cell (e.g. 9.00V for a 3S pack) as this will damage the cells and dramatically reduce the life of your cells. If you do accidentally discharge them below 3.00V per cell, leave them for 30 minutes and if the voltage recovers to over 3.30V per cell then they should be OK to use them again. If they do not recover to at least 3.00V per cell then I'm afraid you have damaged them and they should be disposed of (Please see below for the correct method of disposal).