3.7V Lithium Polymer Battery Data Sheet

Model: 306990

Please Find More:

https://www.fpbattery.com/3-7v-5500mah-lithium-polymer-battery/

File Number: A/FP6990-8638

File Version: 01

CONTACT

CUSTOMER SERVICE
86.755.3682.7358
sales@fpbattery.com
Hours of Operation:
9:00am-6:00pm CST, Monday to Friday

LEARN MORE ON:
https://www.fpbattery.com/

DNK POWER COMPANY LIMITED

BATTERY SPECIFICATION

Part Number	DNK 306990
Nominal Voltage	3.7 V
Nominal Capacity	1900 mAh
Internal Impedence	<60mΩ
Charge Voltage	4.2V
Recommended Charge Current	0.2 C
Allowed Max Charge Current	0.5 C
Output Voltage Range	4.2 - 2.5 V
Recommended Discharge Current	0.2 C
Max Continuous Discharge Current	1 C
Pulse Discharge Current	3 C (10 mS)
Discharge Cut-off Voltage	2.5± 0.05V
Cycle Life to 80% Health	500 (0.2C, 25°C)

1

ENVIRONMENTAL SPECIFICATIONS

Charging Temperature Range	0 - 45°C
Discharging Temperature Range	-20 - 60°C
Storage Period 1 Week	-20 - 45°C
Storage Period 1 Month	-10 - 45°C
Storage Period 6 Months	0 - 35°C

BATTERY PROTECTION

Over Charge	4.275 ± 50mV
Over Discharge	2.5V ± 50mV
Over Current	3A to 5A
Short Circuit	Yes

MECHANICAL SPECIFICATIONS

Dimensions	92x 69 x 3 mm(L*W*T)
Weight	31 g
Battery Terminals	WC/ FL *

CERTIFICATION

Certification Approval	PLEASE CONSULT SALES

* WC=With Connector FL=Flying Leads UWP=Blue Wrapped PVC BWP=Black Wrapped PVC BC= Bare Cell

Inflex and soler

1 YEAR WARRANTY

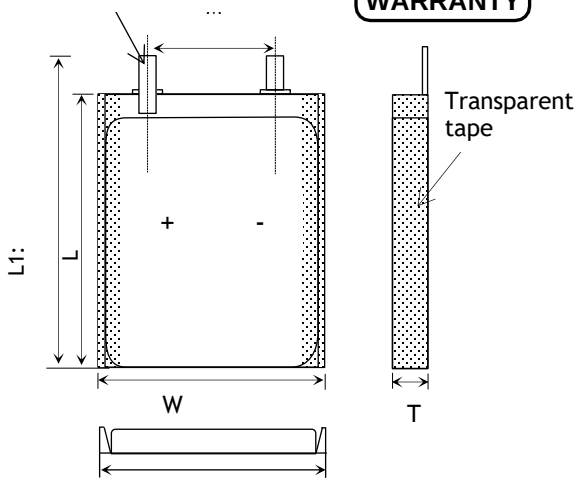

Item	Parameter (mm)
T	3
W	69
M	10
L	90
L_1	92
BL	92 ± 1
CL	100

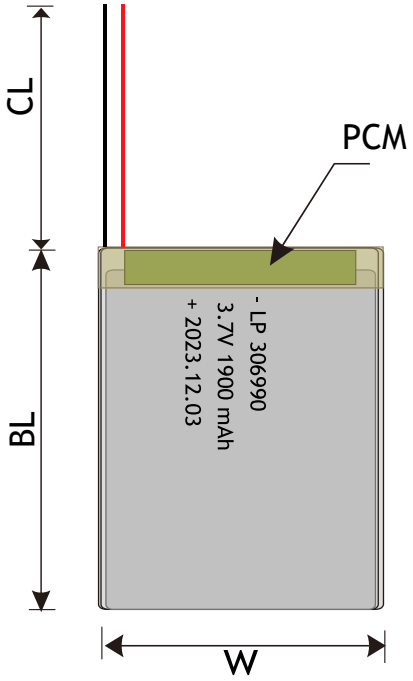

RELATIVE CURVES

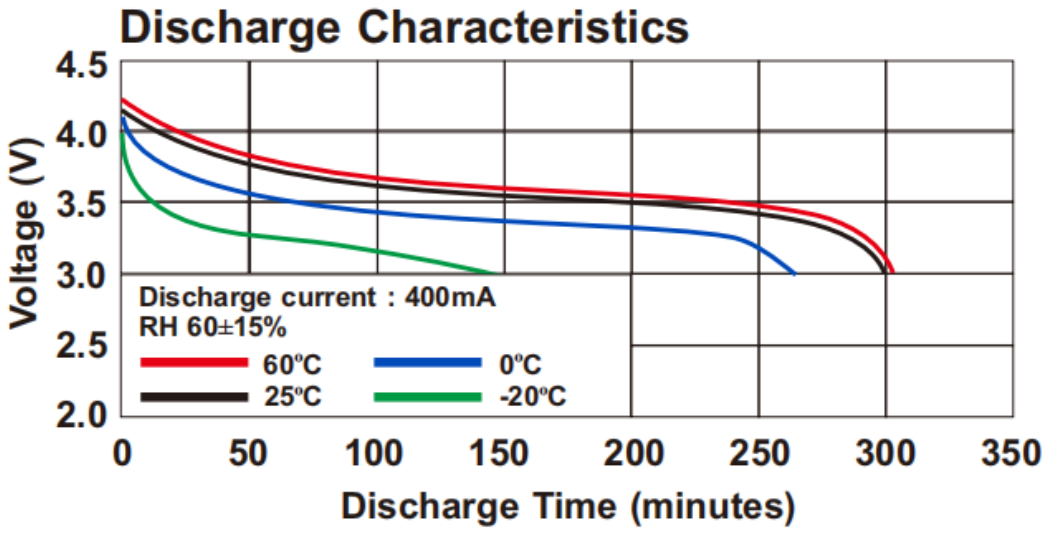

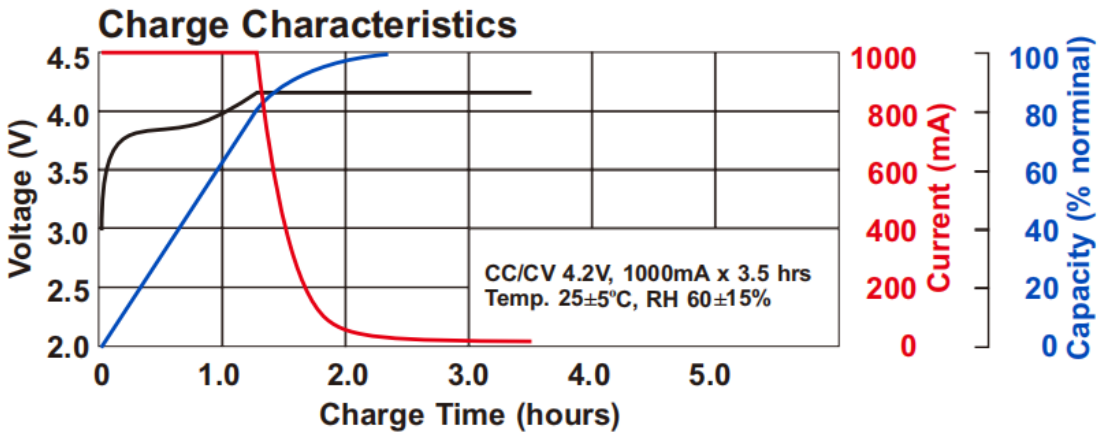

ANNOUNCEMENT

- Do not use the battery during charging to avoid overheating and safety accidents.
- When connecting 2 packs in parallel always make sure they are from the same manufacturer, have the same capacity, are the same age and type and that there is a voltage difference of 0.03Votherwise the higher voltage pack will discharge into the lower voltage pack, which may cause a fire or less.
- The battery must be protected against shocks and splashing of materials from outside the model.
- Never discharge the battery cells below 3.2V.
- Set up dedicated charging area. Area must be free of combustible materials. Maintain space between charging batteries.
- Do not charge a Lipo battery mat has 'ballooned' or 'puffed up', or shows any signs of leakage or physical damage.
- If you notice your LiPo battery pack is swelling while charging, stop the charging process immediately, put the battery in a safe non-flammable metal container and observe it.
- Never leave batteries unattended where they can be damaged by someone.
- Use low voltage cutoff switch or monitor battery voltage while in use on equipment. Do not allow voltage to drop below 3.0 volts.
- NEVER charge a Li-ion or LiPo battery overnight and unattended.
- When using an adapter, select an output voltage and current that meets the needs of the battery.