# 3.7V Lithium Polymer Battery Data Sheet

Model:  306787

Please Find More:

https://www.fpbattery.com/3-7v-1700mah-lithium-polymer-battery/

File Number:  A/FP6787-8471

File Version: 01


CONTACT

CUSTOMER SERVICE
86.755.3682.7358
sales@fpbattery.com
Hours of Operation:
9:00am-6:00pm CST, Monday to Friday

LEARN MORE ON:
https://www.fpbattery.com/

DNK POWER COMPANY LIMITED

## BATTERY SPECIFICATION

| | |
|---|---|
| Part Number | DNK 306787 |
| Nominal Voltage | 3.7 V |
| Nominal Capacity | 1700 mAh |
| Internal Impedence | <60mΩ |
| Charge Voltage | 4.2V |
| Recommended Charge Current | 0.2 C |
| Allowed Max Charge Current | 0.5 C |
| Output Voltage Range | 4.2 - 2.5 V |
| Recommended Discharge Current | 0.2 C |
| Max Continuous Discharge Current | 1 C |
| Pulse Discharge Current | 3 C (10 mS) |
| Discharge Cut-off Voltage | 2.5± 0.05V |
| Cycle Life to 80% Health | 500 (0.2C, 25°C) |

1

## ENVIRONMENTAL SPECIFICATIONS

| | |
|---|---|
| Charging Temperature Range | 0 - 45°C |
| Discharging Temperature Range | -20 - 60°C |
| Storage Period 1 Week | -20 - 45°C |
| Storage Period 1 Month | -10 - 45°C |
| Storage Period 6 Months | 0 - 35°C |

## BATTERY PROTECTION

| | |
|---|---|
| Over Charge | 4.275 ± 50mV |
| Over Discharge | 2.5V ± 50mV |
| Over Current | 3A to 5A |
| Short Circuit | Yes |

## MECHANICAL SPECIFICATIONS

| | |
|---|---|
| Dimensions | 89x 67 x 3 mm(L*W*T) |
| Weight | 28 g |
| Battery Terminals | WC/ FL * |

## CERTIFICATION

| | |
|---|---|
| Certification Approval | PLEASE CONSULT SALES |

* WC=With Connector FL=Flying Leads UWP=Blue Wrapped PVC BWP=Black Wrapped PVC BC= Bare Cell

Inflex and soler

**1 YEAR WARRANTY**

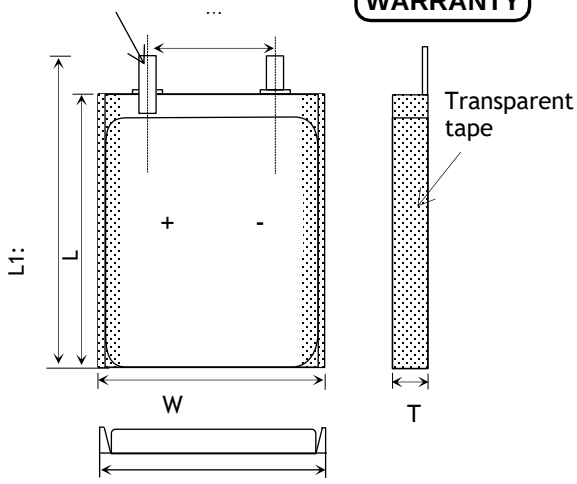


| Item | Parameter (mm) |
|---|---|
| T | 3 |
| W | 67 |
| M | 10 |
| L | 87 |
| $L_1$ | 89 |
| BL | 89 ± 1 |
| CL | 100 |

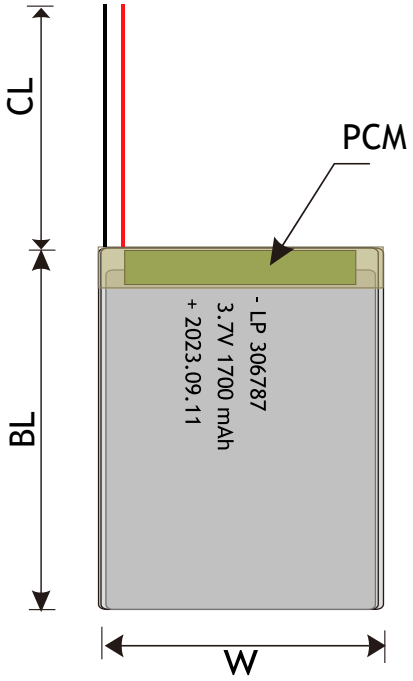

# RELATIVE CURVES

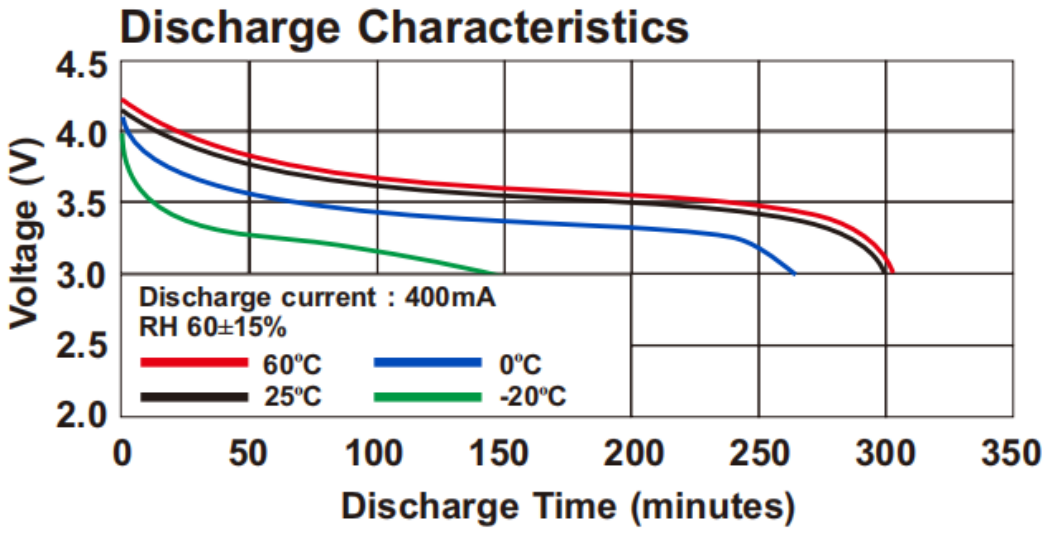


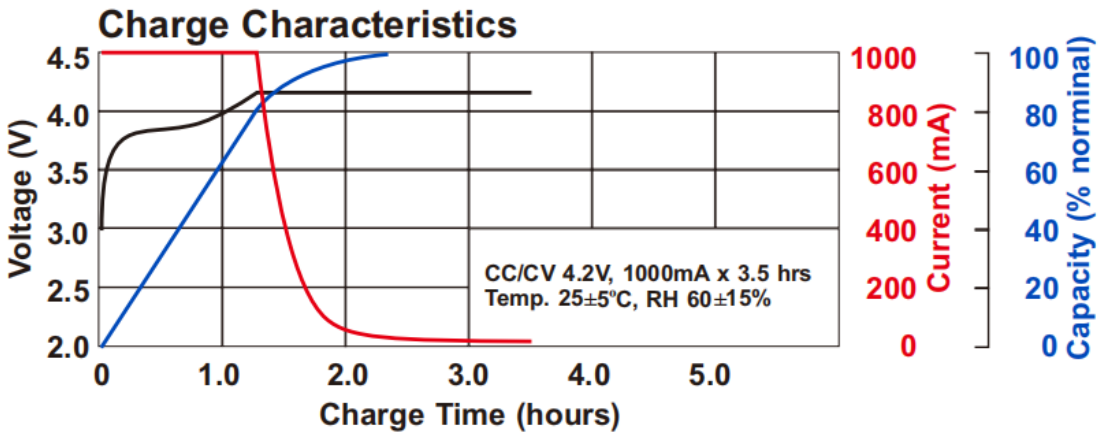


# ANNOUNCEMENT

- Always charge batteries at a rate of 1c (one (times the capacity unless specified by the manufacturer
- Avoid using charging methods other than wireless chargers.
- In general, most LiPo batteries should be charged to no more than 4.2 volts per cell or depleted to less than 3.0 volts per cell. There are new generation batteries available that can handle higher / lower voltages, but they are still new and thus are the exception to the rule.
- Always remove your LiPo battery from your model while charging. Remove the battery from you model and allow it to cool to ambient temperature before re-charging.
- Every time a battery is not used actively (e.g. for more than 3 days), it should be placed in the storage area tAVOID being damaged and becoming unsafe.
- ALWAYS store batteries and devices at room temperature.
- ALWAYS evacuate the building to your unit’s designated outside meeting location.
- Avoid tightening the voltage adjustment knob on the way to use the battery.
- Always follow the manufacturer’s safety instructions
- Immediately disconnect the batteries if, during operation or charging, they emit an unusual smell, develop heat, change shape/geometry, or behave abnormally.
- For thermal runaway/fire, activate fire alarm, evacuate, contact public safety.