3.7V Lithium Polymer Battery Data Sheet

Model: 306683

Please Find More:

https://www.fpbattery.com/3-7v-1600mah-lithium-polymer-battery/

File Number: A/FP6683-7614

File Version: 01

CONTACT

CUSTOMER SERVICE
86.755.3682.7358
sales@fpbattery.com
Hours of Operation:
9:00am-6:00pm CST, Monday to Friday

LEARN MORE ON:
https://www.fpbattery.com/

DNK POWER COMPANY LIMITED

BATTERY SPECIFICATION

Part Number	DNK 306683
Nominal Voltage	3.7 V
Nominal Capacity	1600 mAh
Internal Impedence	<60mΩ
Charge Voltage	4.2V
Recommended Charge Current	0.2 C
Allowed Max Charge Current	0.5 C
Output Voltage Range	4.2 - 2.5 V
Recommended Discharge Current	0.2 C
Max Continuous Discharge Current	1 C
Pulse Discharge Current	3 C (10 mS)
Discharge Cut-off Voltage	2.5± 0.05V
Cycle Life to 80% Health	500 (0.2C, 25°C)

Inflex and soler

1 YEAR WARRANTY

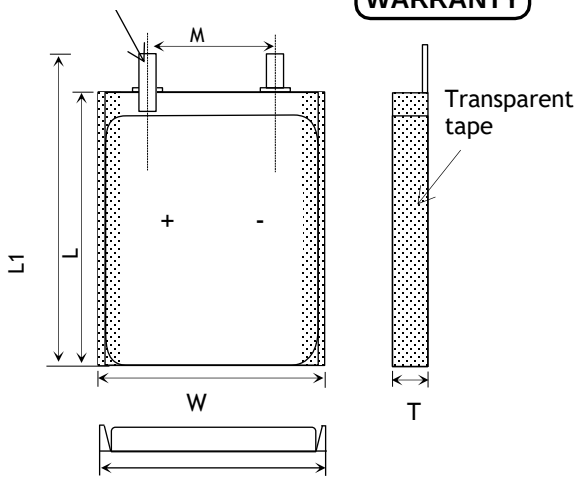

Item	Parameter (mm)
T	3
W	66
M	10
L	83
L_1	85
BL	85 ± 1
CL	100

ENVIRONMENTAL SPECIFICATIONS

Charging Temperature Range	0 - 45°C
Discharging Temperature Range	-20 - 60°C
Storage Period 1 Week	-20 - 45°C
Storage Period 1 Month	-10 - 45°C
Storage Period 6 Months	0 - 35°C

BATTERY PROTECTION

Over Charge	4.275 ± 50mV
Over Discharge	2.5V ± 50mV
Over Current	3A to 5A
Short Circuit	Yes

MECHANICAL SPECIFICATIONS

Dimensions	85x 66 x 3 mm(L*W*T)
Weight	26 g
Battery Terminals	WC/ FL *

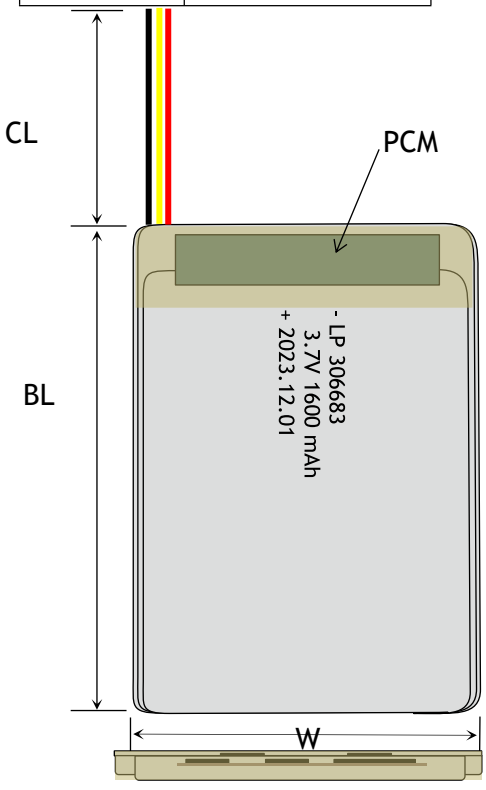

CERTIFICATION

Certification Approval	PLEASE CONSULT SALES

* WC=With Connector FL=Flying Leads UWP=Blue Wrapped PVC BWP=Black Wrapped PVC BC= Bare Cell

RELATIVE CURVES

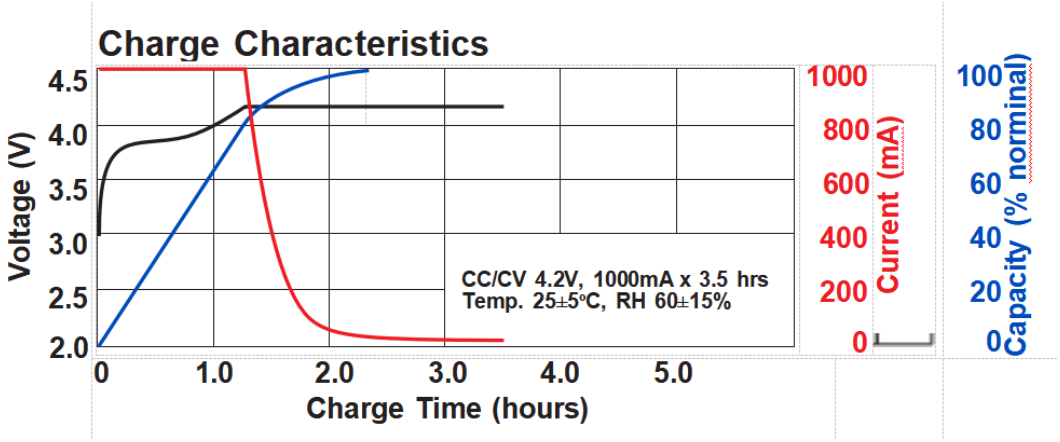

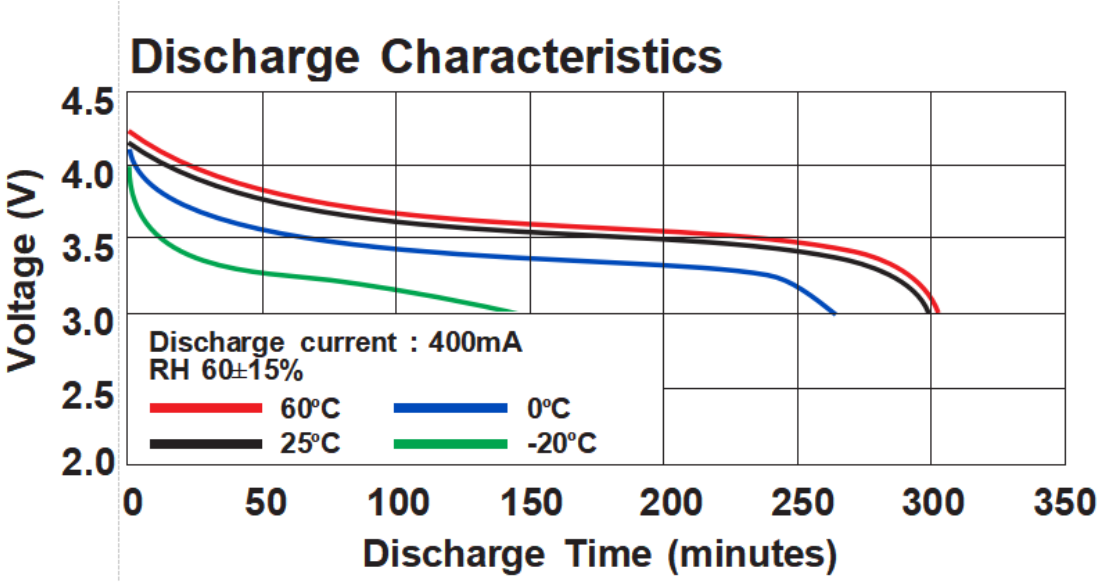

ANNOUNCEMENT

- Only use chargers provided by and/or approved by the manufacturer.
- Never alter, puncture or impact Batteries or related components.
- Never immerse the battery in water or allow it to get wet.
- Always charge/store Batteries in a non-conductive, fire-proof container or bag.
- NEVER alter or disassemble a Lipo battery.
- When replacing batteries, make sure to use batteries of the same type, size and brand.
- Obtain recycling container from EHRS for all batteries except LiPo.
- Do not plug and unplug the charger while using the battery.
- Place batteries suspected of being damaged into the emergency battery isolation container and monitor temperature.
- Do not open the battery system or modules unless you have a risk assessment, training and permission.
- Never charge a LiPo battery while inside your model.