3.7V Lithium Polymer Battery Data Sheet

Model: 306676

Please Find More:

https://www.fpbattery.com/1500mah-lithium-polymer-battery/

File Number: A/FP6676-5375

File Version: 01

CONTACT

CUSTOMER SERVICE
86.755.3682.7358
sales@fpbattery.com
Hours of Operation:
9:00am-6:00pm CST, Monday to Friday

LEARN MORE ON:
https://www.fpbattery.com/

DNK POWER COMPANY LIMITED

BATTERY SPECIFICATION

Part Number	DNK 306676
Nominal Voltage	3.7 V
Nominal Capacity	1500 mAh
Internal Impedence	<60mΩ
Charge Voltage	4.2V
Recommended Charge Current	0.2 C
Allowed Max Charge Current	0.5 C
Output Voltage Range	4.2 - 2.5 V
Recommended Discharge Current	0.2 C
Max Continuous Discharge Current	1 C
Pulse Discharge Current	3 C (10 mS)
Discharge Cut-off Voltage	2.5± 0.05V
Cycle Life to 80% Health	500 (0.2C, 25°C)

1

1 YEAR WARRANTY

Inflex and soler

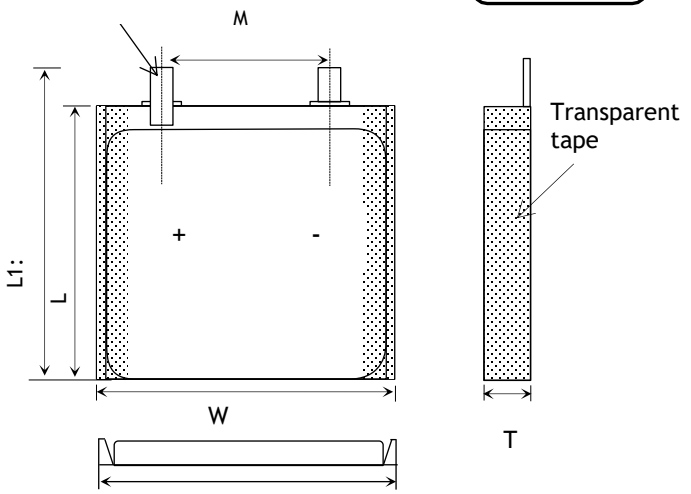

Item	Parameter (mm)
T	3
W	66
M	10
L	76
L_1	78
BL	78 ± 1
CL	100

ENVIRONMENTAL SPECIFICATIONS

Charging Temperature Range	0 - 45°C
Discharging Temperature Range	-20 - 60°C
Storage Period 1 Week	-20 - 45°C
Storage Period 1 Month	-10 - 45°C
Storage Period 6 Months	0 - 35°C

BATTERY PROTECTION

Over Charge	4.275 ± 50mV
Over Discharge	2.5V ± 50mV
Over Current	3A to 5A
Short Circuit	Yes

MECHANICAL SPECIFICATIONS

Dimensions	78x 66 x 3 mm(L*W*T)
Weight	Around 25 g
Battery Terminals	WC/ FL *

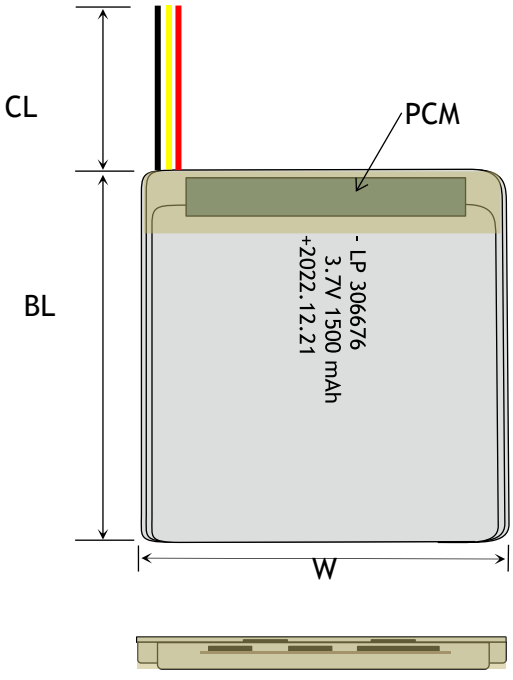

CERTIFICATION

Certification Approval	PLEASE CONSULT SALES

* aWC=With Connector FL=Flying Leads UWP=Blue Wrapped PVC
BWP=Black Wrapped PVC BC= Bare Cell

BULK PRODUCTION ACTUAL PICTURES



BARE CELL (BC)



FLYING LEADS (FL)



WITH CONNECTOR (WC)



BLUE WRAPPED PVC (UWP)



BLACK WRAPPED PVC (BWP)

3.7V LIPO BATTERY OPTIONS



Special Ingredients to make batteries work from -40 -85 ° C



Discharging Current up to 100C



Popular JST,Molex,Hirose,Anderson available



LED Power Indicator



Power Button



Upgrade to LifePo4 tech and life circle up to 1500

RELATIVE CURVES

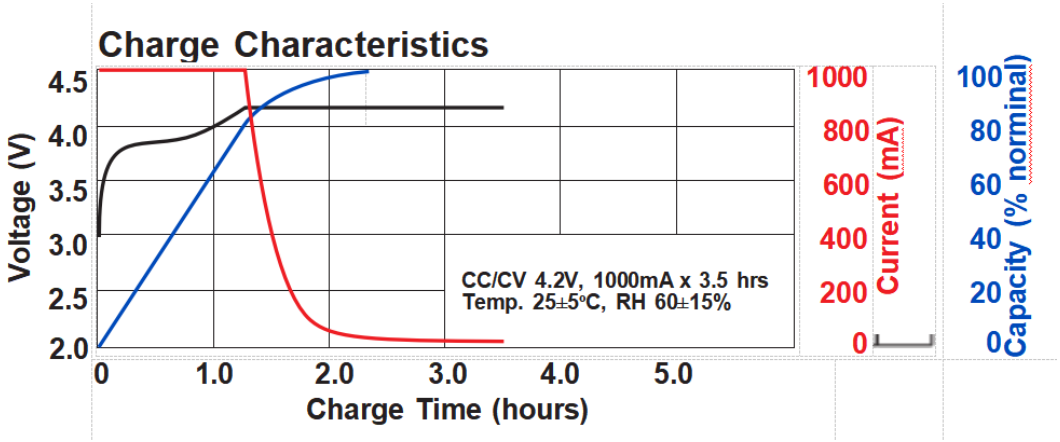

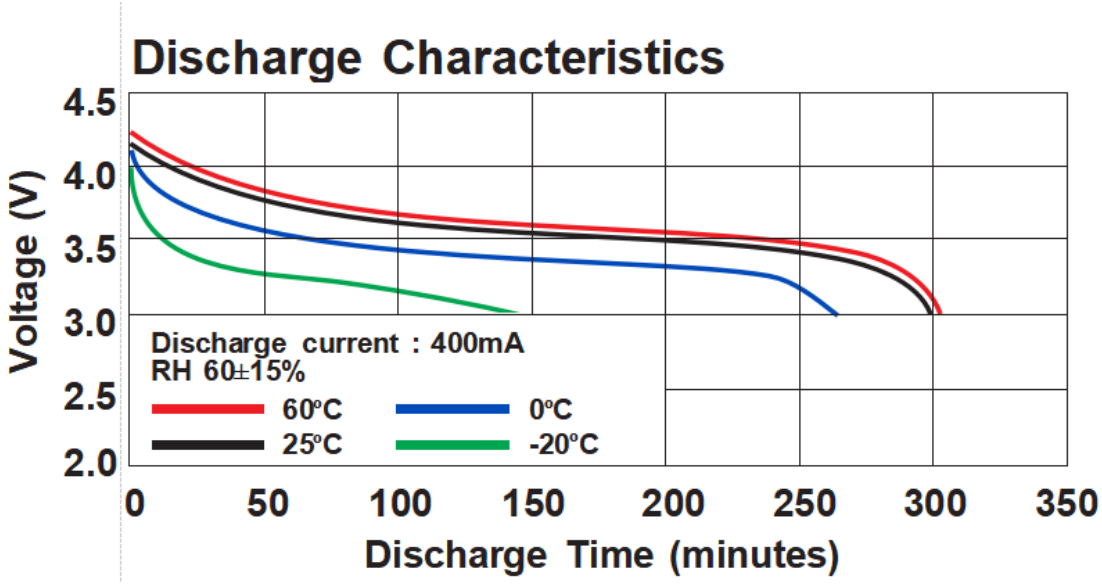

ANNOUNCEMENT

- Read the Product Specification and respect the maximum voltage (4.2V/cell). Never charge higher than 4.25V, which is the maximum voltage. Charging with a higher voltage will irreparably damage the battery and may lead to the start of a fire.
- Do not over-discharge (3.2V per cell)
- Do not allow a Lipo battery to get wet
- Never charge a LiPo pack that has ballooned or swelled due to over/under charging or from a crash.
- Never incinerate nor dispose of the cells in a fire. These may cause firing of the cells, which is very dangerous and is prohibited.
- Never discharge Batteries to voltage below which they are rated by the manufacturer when measured under load(connected to the vehicle or a charger capable of discharge). Batteries discharged to a voltage lower than the lowest approved voltage may be damaged, resulting in loss of performance and potential fire when batteries are charged.
- Always consult the manufacturerGspecific battery manual for proper instructions.
- ALWAYS use the correct battery and charger size and type that is specified for the device.
- Although protective electronics built into the battery should prevent overcharging, such a battery management system can fail– for example if the charger is not suitable and thus unattended charging is always a source of danger.
- Do not use damaged battery connectors.
- Insulate all battery terminals on batteries to be disposed of.