3.7V Lithium Polymer Battery Data Sheet

Model: 306586

Please Find More:

https://www.fpbattery.com/3-7v-1700mah-lithium-polymer-battery/

File Number: A/FP6586-8949

File Version: 01

CONTACT

CUSTOMER SERVICE
86.755.3682.7358
sales@fpbattery.com
Hours of Operation:
9:00am-6:00pm CST, Monday to Friday

LEARN MORE ON:
https://www.fpbattery.com/

DNK POWER COMPANY LIMITED

BATTERY SPECIFICATION

Part Number	DNK 306586
Nominal Voltage	3.7 V
Nominal Capacity	1700 mAh
Internal Impedence	<60mΩ
Charge Voltage	4.2V
Recommended Charge Current	0.2 C
Allowed Max Charge Current	0.5 C
Output Voltage Range	4.2 - 2.5 V
Recommended Discharge Current	0.2 C
Max Continuous Discharge Current	1 C
Pulse Discharge Current	3 C (10 mS)
Discharge Cut-off Voltage	2.5± 0.05V
Cycle Life to 80% Health	500 (0.2C, 25°C)

ENVIRONMENTAL SPECIFICATIONS

Charging Temperature Range	0 - 45°C
Discharging Temperature Range	-20 - 60°C
Storage Period 1 Week	-20 - 45°C
Storage Period 1 Month	-10 - 45°C
Storage Period 6 Months	0 - 35°C

BATTERY PROTECTION

Over Charge	4.275 ± 50mV
Over Discharge	2.5V ± 50mV
Over Current	3A to 5A
Short Circuit	Yes

MECHANICAL SPECIFICATIONS

Dimensions	88x 65 x 3 mm(L*W*T)
Weight	Around 28 g
Battery Terminals	WC/ FL *

CERTIFICATION

Certification Approval	PLEASE CONSULT SALES

* WC=With Connector FL=Flying Leads UWP=Blue Wrapped PVC BWP=Black Wrapped PVC BC= Bare Cell

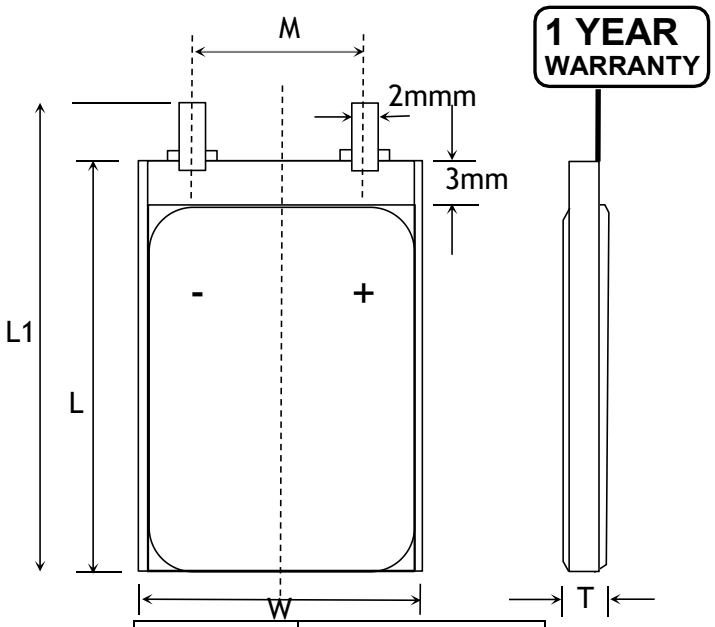

Item	Parameter (mm)
T	3
W	65
M	10
L	86
L_1	88
BL	88 ± 1
CL	100

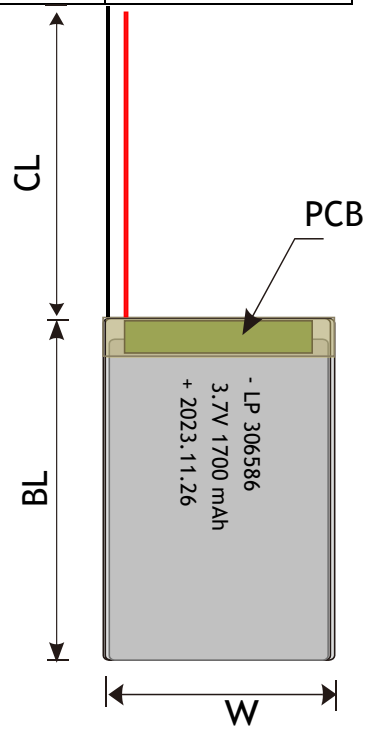

RELATIVE CURVES

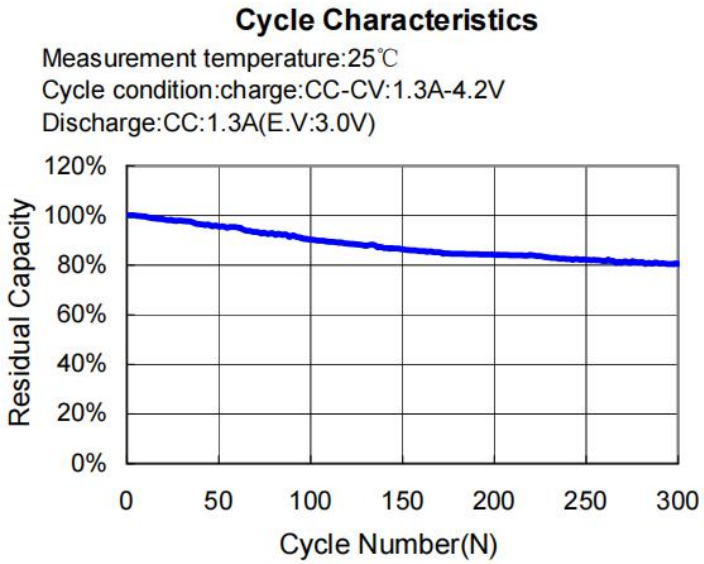

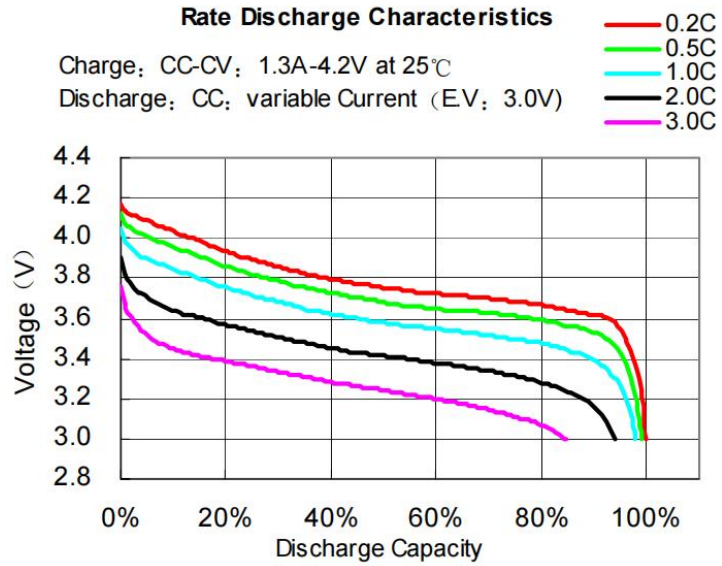

ANNOUNCEMENT

- Reacting and leaking batteries are considered hazardous waste. Please consult Emergency Procedures below.
- Always charge batteries at a rate of 1c (one (times the capacity unless specified by the manufacturer.
- Never put LiPo batteries or battery packs in pockets, drawers or bags where they might make contact with something made of metal. This can cause a short circuit.
- When replacing batteries, make sure to use batteries of the same type, size and brand.
- Follow all safe operating guidelines and recommendations provided by the manufacturer.
- Charging with higher current than recommended value may cause damage to cell electrical, mechanical and safety performance and could lead to heat generation or leakage.
- Never disassemble, modify, puncture, mechanically shock, or short circuit the battery. Leakage, smoke emission, ignition, explosion, or fire, which may result in personal injury and property damage, can occur.
- If you plan not to use your LiPo cells for an extended period (more then 4 days) then use the "Storage" setting on your charger. If your charger does not have this feature then don't use it and invest in one that does.
- NEVER use extension cords, power strips, or multi-plugs while charging Li-Ion and LiPo batteries or equipment. Plug the charging cord directly into a wall electrical outlet. Note: only charge one battery or device at a time per outlet.
- The cells shall never be soaked with liquids such as water, seawater drinks such as soft drinks, juices coffee or others.
- If charging indoors, only charge with a smoke detector above where you are charging.