3.7V Lithium Polymer Battery Data Sheet

Model: 306572

Please Find More:

https://www.fpbattery.com/3-7v-1400mah-lithium-polymer-battery/

File Number: A/FP6572-4378

File Version: 01

CONTACT

CUSTOMER SERVICE
86.755.3682.7358
sales@fpbattery.com
Hours of Operation:
9:00am-6:00pm CST, Monday to Friday

LEARN MORE ON:
https://www.fpbattery.com/

DNK POWER COMPANY LIMITED

BATTERY SPECIFICATION

Part Number	DNK 306572
Nominal Voltage	3.7 V
Nominal Capacity	1400 mAh
Internal Impedence	<60mΩ
Charge Voltage	4.2V
Recommended Charge Current	0.2 C
Allowed Max Charge Current	0.5 C
Output Voltage Range	4.2 - 2.5 V
Recommended Discharge Current	0.2 C
Max Continuous Discharge Current	1 C
Pulse Discharge Current	3 C (10 mS)
Discharge Cut-off Voltage	2.5± 0.05V
Cycle Life to 80% Health	500 (0.2C, 25°C)

1

1 YEAR WARRANTY

Inflex and soler

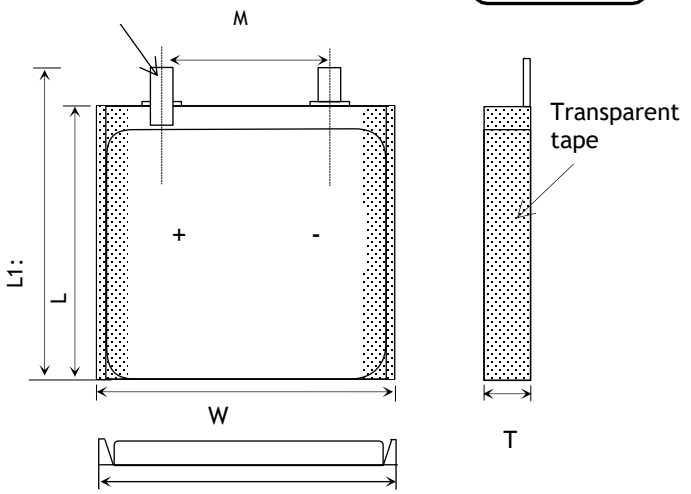

Item	Parameter (mm)
T	3
W	65
M	10
L	72
L_1	74
BL	74 ± 1
CL	100

ENVIRONMENTAL SPECIFICATIONS

Charging Temperature Range	0 - 45°C
Discharging Temperature Range	-20 - 60°C
Storage Period 1 Week	-20 - 45°C
Storage Period 1 Month	-10 - 45°C
Storage Period 6 Months	0 - 35°C

BATTERY PROTECTION

Over Charge	4.275 ± 50mV
Over Discharge	2.5V ± 50mV
Over Current	3A to 5A
Short Circuit	Yes

MECHANICAL SPECIFICATIONS

Dimensions	74x 65 x 3 mm(L*W*T)
Weight	Around 23 g
Battery Terminals	WC/ FL *

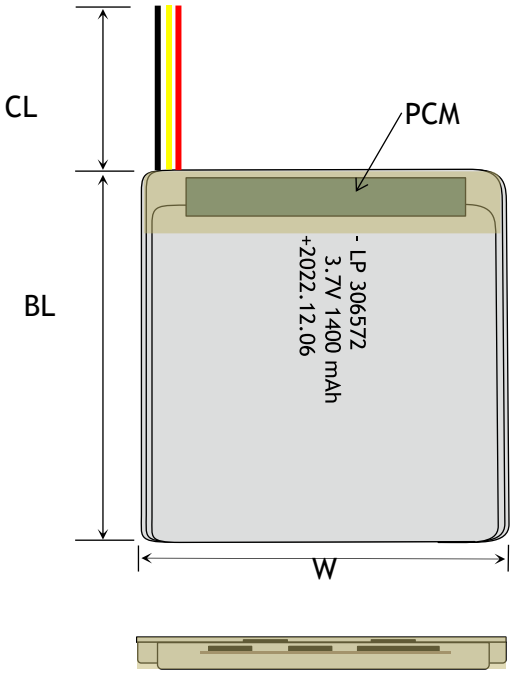

CERTIFICATION

Certification Approval	PLEASE CONSULT SALES

* aWC=With Connector FL=Flying Leads UWP=Blue Wrapped PVC
BWP=Black Wrapped PVC BC= Bare Cell

BULK PRODUCTION ACTUAL PICTURES



BARE CELL (BC)



FLYING LEADS (FL)



WITH CONNECTOR (WC)



BLUE WRAPPED PVC (UWP)



BLACK WRAPPED PVC (BWP)

3.7V LIPO BATTERY OPTIONS



Special Ingredients to make batteries work from -40 -85 ° C



Discharging Current up to 100C



Popular JST,Molex,Hirose,Anderson available



LED Power Indicator



Power Button



Upgrade to LifePo4 tech and life circle up to 1500

RELATIVE CURVES

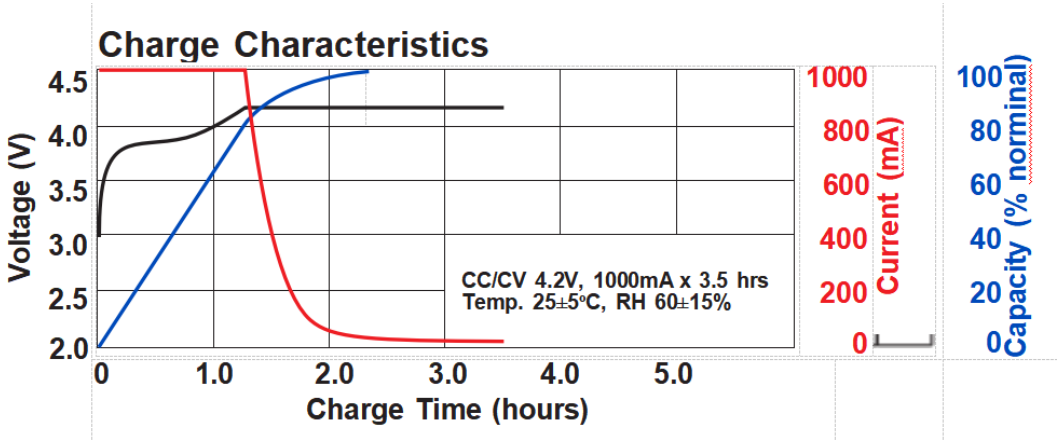

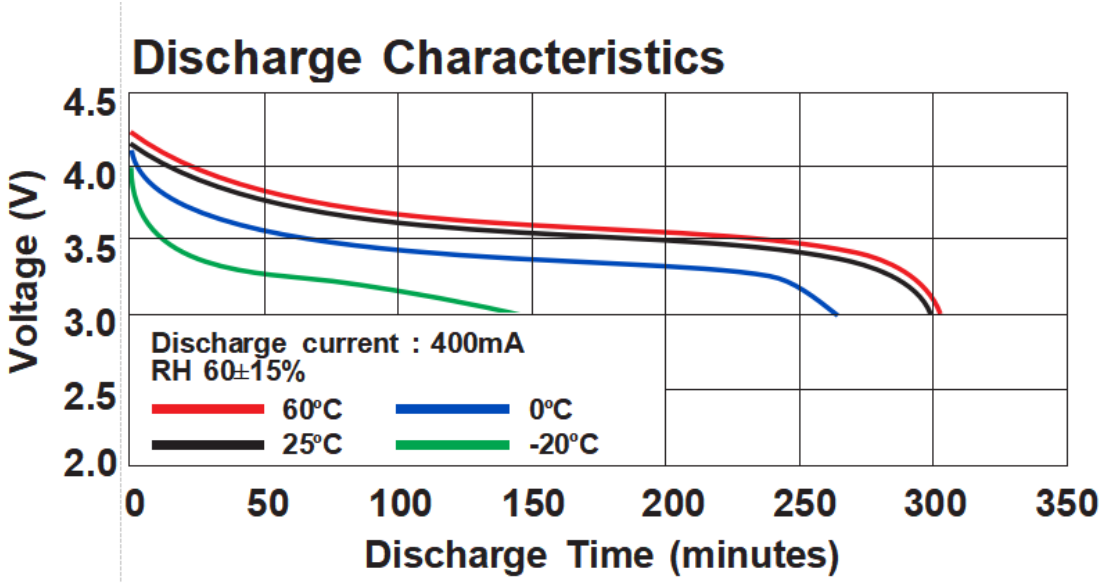

ANNOUNCEMENT

- ALWAYS evacuate the room or space and notify others to evacuate.
- Dedicate a battery storage area free of combustible materials.
- Prevent arcing by turning the charger off before disconnecting the battery.
- When using an adapter, select an output voltage and current that meets the needs of the battery.
- Keep all batteries out of the reach of children.
- ALWAYS use the charging cord supplied with the device (or only use a replacement charging cord that is specified by the device manufacturer to bean approved alternative).
- Do not fully discharge your LiPo battery pack. Discharging a LiPo beyond it’s critical minimum voltage (often 3.0v) can cause damage to the battery.
- Do not puncture the cells as this could cause a fire.
- Never charge a battery that is still warm after usage, and never use a battery that is still warm from charging.
- Never immerse the battery in water or allow it to get wet.
- Always store LiPo pack in a safe and nonGcombustible container away from flammable/combustible materials.