3.7V Lithium Polymer Battery Data Sheet

Model: 306485

Please Find More:

https://www.fpbattery.com/3-7v-1600mah-lithium-polymer-battery/

File Number: A/FP6485-9016

File Version: 01

CONTACT

CUSTOMER SERVICE
86.755.3682.7358
sales@fpbattery.com
Hours of Operation:
9:00am-6:00pm CST, Monday to Friday

LEARN MORE ON:
https://www.fpbattery.com/

DNK POWER COMPANY LIMITED

BATTERY SPECIFICATION

Part Number	DNK 306485
Nominal Voltage	3.7 V
Nominal Capacity	1600 mAh
Internal Impedence	<60mΩ
Charge Voltage	4.2V
Recommended Charge Current	0.2 C
Allowed Max Charge Current	0.5 C
Output Voltage Range	4.2 - 2.5 V
Recommended Discharge Current	0.2 C
Max Continuous Discharge Current	1 C
Pulse Discharge Current	3 C (10 mS)
Discharge Cut-off Voltage	2.5± 0.05V
Cycle Life to 80% Health	500 (0.2C, 25°C)

ENVIRONMENTAL SPECIFICATIONS

Charging Temperature Range	0 - 45°C
Discharging Temperature Range	-20 - 60°C
Storage Period 1 Week	-20 - 45°C
Storage Period 1 Month	-10 - 45°C
Storage Period 6 Months	0 - 35°C

BATTERY PROTECTION

Over Charge	4.275 ± 50mV
Over Discharge	2.5V ± 50mV
Over Current	3A to 5A
Short Circuit	Yes

MECHANICAL SPECIFICATIONS

Dimensions	87x 64 x 3 mm(L*W*T)
Weight	Around 26 g
Battery Terminals	WC/ FL *

CERTIFICATION

Certification Approval	PLEASE CONSULT SALES

* WC=With Connector FL=Flying Leads UWP=Blue Wrapped PVC BWP=Black Wrapped PVC BC= Bare Cell

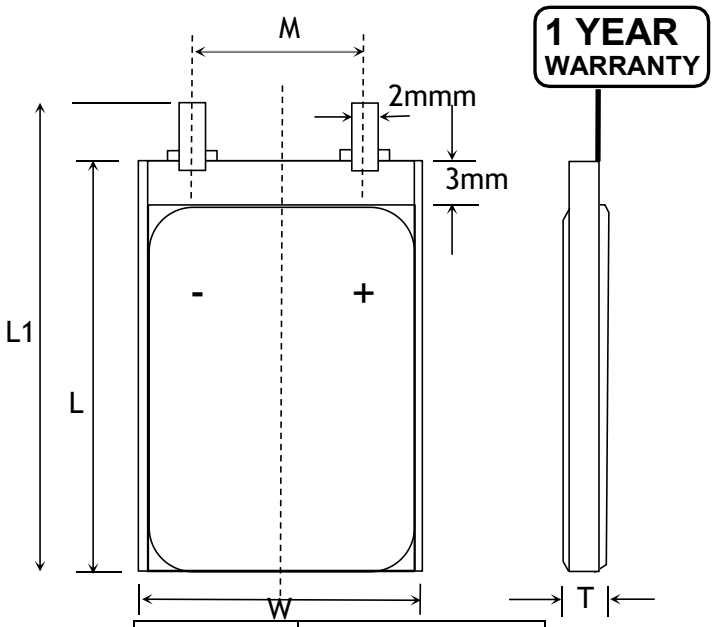

Item	Parameter (mm)
T	3
W	64
M	10
L	85
L_1	87
BL	87 ± 1
CL	100

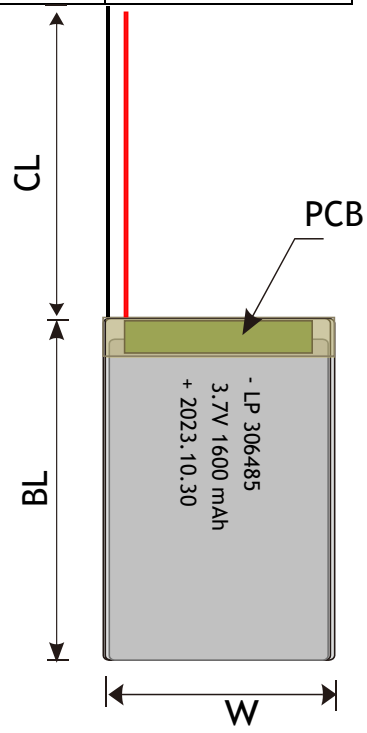

RELATIVE CURVES

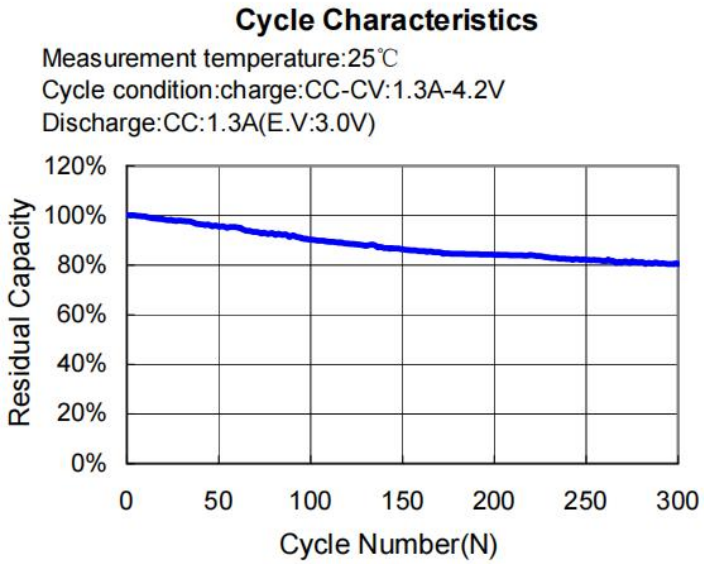

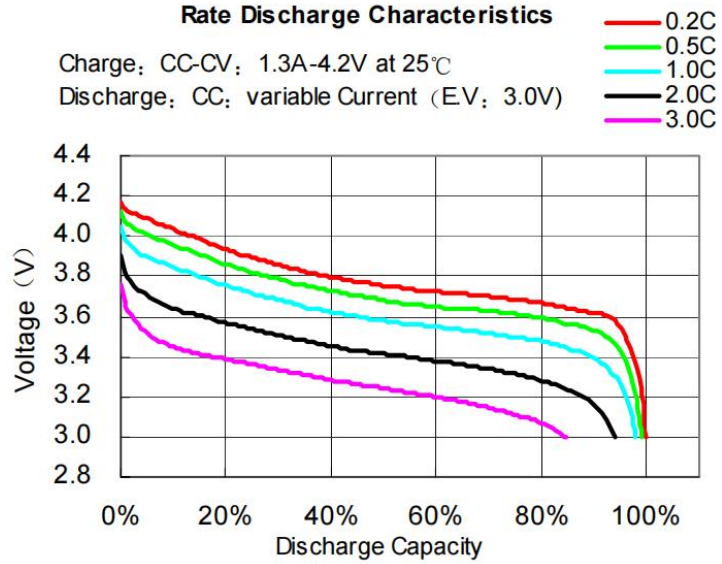

ANNOUNCEMENT

- Use the included charge lead (if applicable) for charging purposes only! DO NOT use the harness as a power adapter. Use of the charging harness as a power adapter may result in overheating of the battery connection resulting in melting of the plastic battery case.
- Avoid using the device for a long time in a hot environment.
- Never let the positive and negative battery leads touch each other. It can lead to cell ballooning, cell damage, fire or an explosion.
- Regularly check the condition of the battery. Do not use if damaged or swollen
- Work on insulated surfaces. Avoid sharp edges and tools.
- Misuse of a Lipo battery may result in the battery generating excessive heat, igniting or exploding. Keep batteries out of the reach of children.
- Heat kills Lipos, the hotter a battery gets, the shorter the lifespan will be.
- Before starting work, remove watches, metal rings, and other metal jewelry when working with or near large batteries or power supplies. If the metal from your jewelry comes into contact with a terminal, you become part of the circuit. Effects can vary from a small electric shock to burns or even electrocution, depending on the power of the battery.
- Always balance charge batteries using the charger's balance charging option. Otherwise, an unbalanced cell may become over charged. This will reduce the life of the battery, and possibly cause a fire which could result in personal injury and property damage.
- Never drop this type of battery, it will be deformed and we advise you never to try to charge a deformed battery as this may cause swelling, leakage and even fire.
- Do not short-circuit the battery.