3.7V Lithium Polymer Battery Data Sheet

Model: 306481

Please Find More:

https://www.fpbattery.com/3-7v-1600mah-lithium-polymer-battery/

File Number: A/FP6481-7758

File Version: 01

CONTACT

CUSTOMER SERVICE
86.755.3682.7358
sales@fpbattery.com
Hours of Operation:
9:00am-6:00pm CST, Monday to Friday

LEARN MORE ON:
https://www.fpbattery.com/

DNK POWER COMPANY LIMITED

BATTERY SPECIFICATION

Part Number	DNK 306481
Nominal Voltage	3.7 V
Nominal Capacity	1600 mAh
Internal Impedence	<60mΩ
Charge Voltage	4.2V
Recommended Charge Current	0.2 C
Allowed Max Charge Current	0.5 C
Output Voltage Range	4.2 - 2.5 V
Recommended Discharge Current	0.2 C
Max Continuous Discharge Current	1 C
Pulse Discharge Current	3 C (10 mS)
Discharge Cut-off Voltage	2.5± 0.05V
Cycle Life to 80% Health	500 (0.2C, 25°C)

1

Inflex and soler

1 YEAR WARRANTY

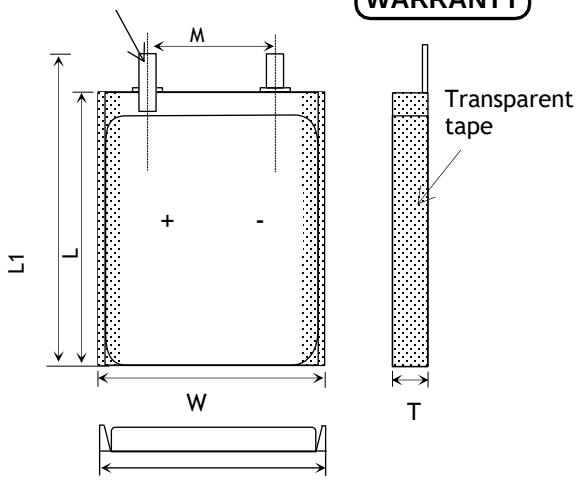

Item	Parameter (mm)
T	3
W	64
M	10
L	81
L_1	83
BL	83 ± 1
CL	100

ENVIRONMENTAL SPECIFICATIONS

Charging Temperature Range	0 - 45°C
Discharging Temperature Range	-20 - 60°C
Storage Period 1 Week	-20 - 45°C
Storage Period 1 Month	-10 - 45°C
Storage Period 6 Months	0 - 35°C

BATTERY PROTECTION

Over Charge	4.275 ± 50mV
Over Discharge	2.5V ± 50mV
Over Current	3A to 5A
Short Circuit	Yes

MECHANICAL SPECIFICATIONS

Dimensions	83x 64 x 3 mm(L*W*T)
Weight	26 g
Battery Terminals	WC/ FL *

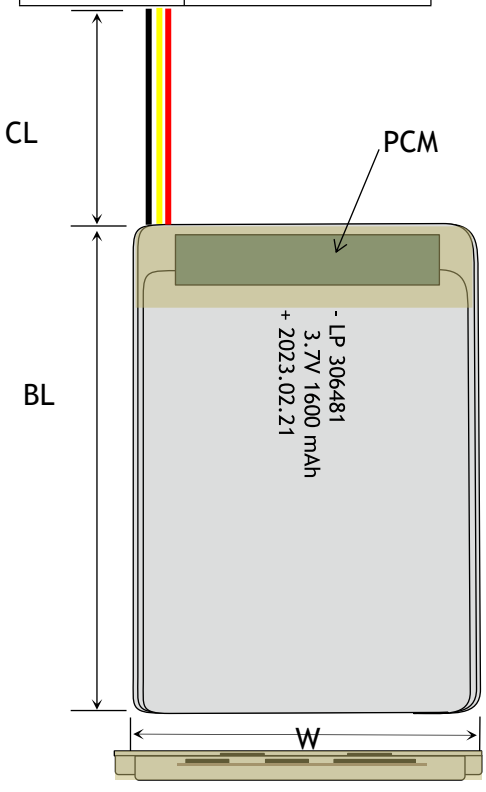

CERTIFICATION

Certification Approval	PLEASE CONSULT SALES

* WC=With Connector FL=Flying Leads UWP=Blue Wrapped PVC
BWP=Black Wrapped PVC BC= Bare Cell

RELATIVE CURVES

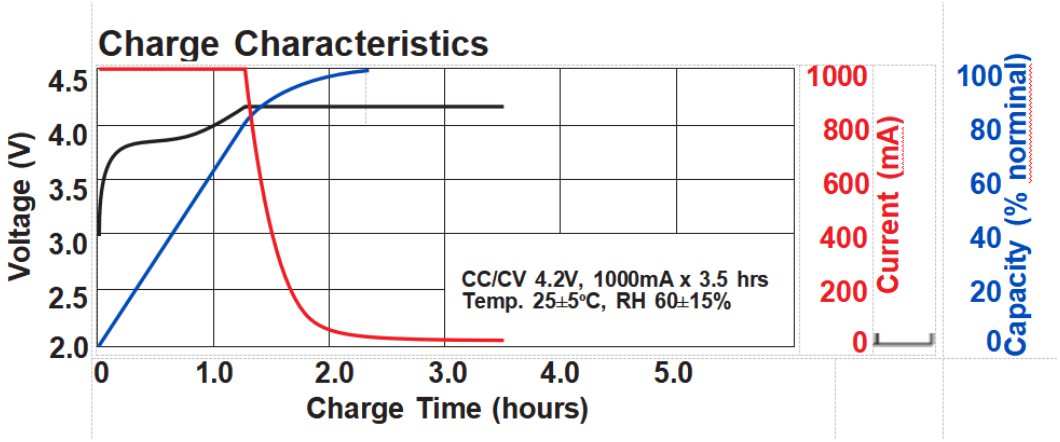

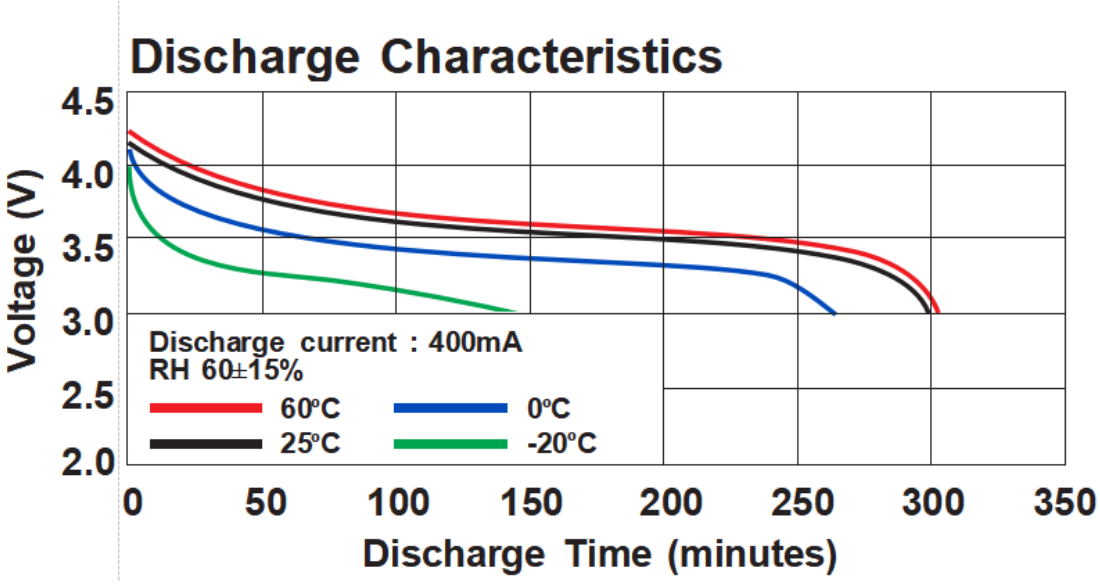

ANNOUNCEMENT

- Do not plug and unplug the charger while using the battery.
- Avoid placing the battery in a damp environment.
- Only use chargers provided by and/or approved by the manufacturer.
- If charging indoors, only charge with a smoke detector above where you are charging.
- When replacing batteries, make sure to use batteries of the same type, size and brand.
- Higher cell voltage during storage will increase the self-discharge rate of the battery, which may lead to over-discharge and deteriorate battery performance. It is recommended that the battery remain at a lower voltage (about 3.8V/cell) throughout the period of storage. If the battery is to be stored for longer than one year, the user should charge the battery at least once per year to 3.8V/cell to prevent over-discharge.
- Avoid placing the battery in a damp environment.
- When charging a LiPo battery always use LiPo Safety Bag (Flame retardant).
- Do not 'peak charge' or 'top off' Lipo batteries always remove Lipo batteries from a charger once they are charged.
- Do not charge a Lipo battery mat has 'ballooned' or 'puffed up', or shows any signs of leakage or physical damage.
- Use the charger program to charge the LiPo batteries, never use any other program.