3.7V Lithium Polymer Battery Data Sheet

Model: 306379

Please Find More:

https://www.fpbattery.com/1500mah-lithium-polymer-battery/

File Number: A/FP6379-7550

File Version: 01

CONTACT

CUSTOMER SERVICE
86.755.3682.7358
sales@fpbattery.com
Hours of Operation:
9:00am-6:00pm CST, Monday to Friday

LEARN MORE ON:
https://www.fpbattery.com/

DNK POWER COMPANY LIMITED

BATTERY SPECIFICATION

Part Number	DNK 306379
Nominal Voltage	3.7 V
Nominal Capacity	1500 mAh
Internal Impedence	<60mΩ
Charge Voltage	4.2V
Recommended Charge Current	0.2 C
Allowed Max Charge Current	0.5 C
Output Voltage Range	4.2 - 2.5 V
Recommended Discharge Current	0.2 C
Max Continuous Discharge Current	1 C
Pulse Discharge Current	3 C (10 mS)
Discharge Cut-off Voltage	2.5± 0.05V
Cycle Life to 80% Health	500 (0.2C, 25°C)

1

Inflex and soler

1 YEAR WARRANTY

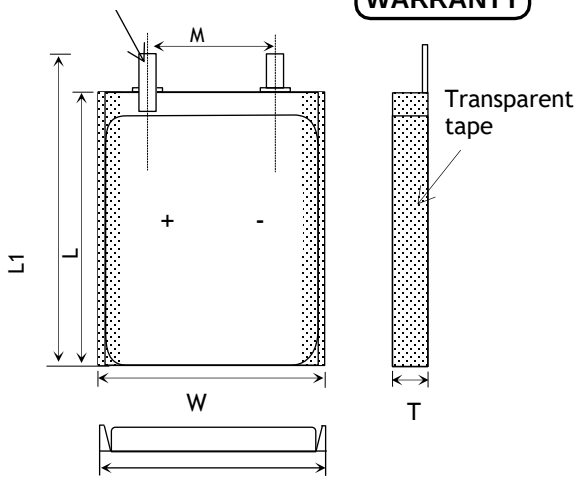

Item	Parameter (mm)
T	3
W	63
M	10
L	79
L_1	81
BL	81 ± 1
CL	100

ENVIRONMENTAL SPECIFICATIONS

Charging Temperature Range	0 - 45°C
Discharging Temperature Range	-20 - 60°C
Storage Period 1 Week	-20 - 45°C
Storage Period 1 Month	-10 - 45°C
Storage Period 6 Months	0 - 35°C

BATTERY PROTECTION

Over Charge	4.275 ± 50mV
Over Discharge	2.5V ± 50mV
Over Current	3A to 5A
Short Circuit	Yes

MECHANICAL SPECIFICATIONS

Dimensions	81x 63 x 3 mm(L*W*T)
Weight	25 g
Battery Terminals	WC/ FL *

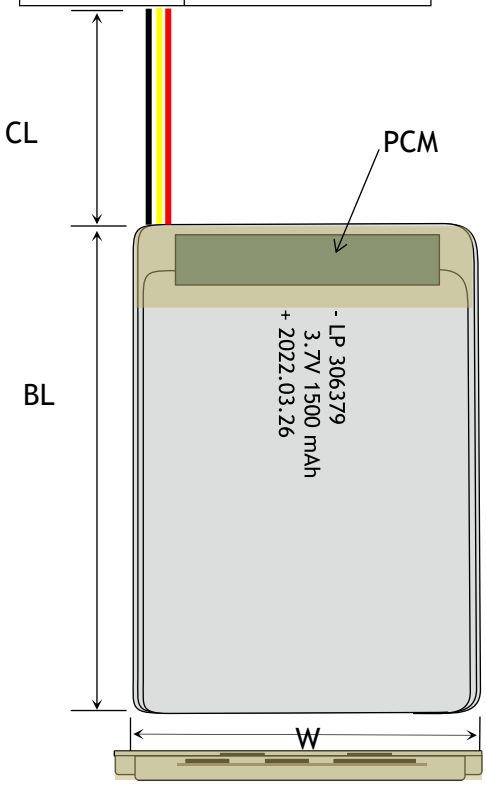

CERTIFICATION

Certification Approval	PLEASE CONSULT SALES

* WC=With Connector FL=Flying Leads UWP=Blue Wrapped PVC
BWP=Black Wrapped PVC BC= Bare Cell

RELATIVE CURVES

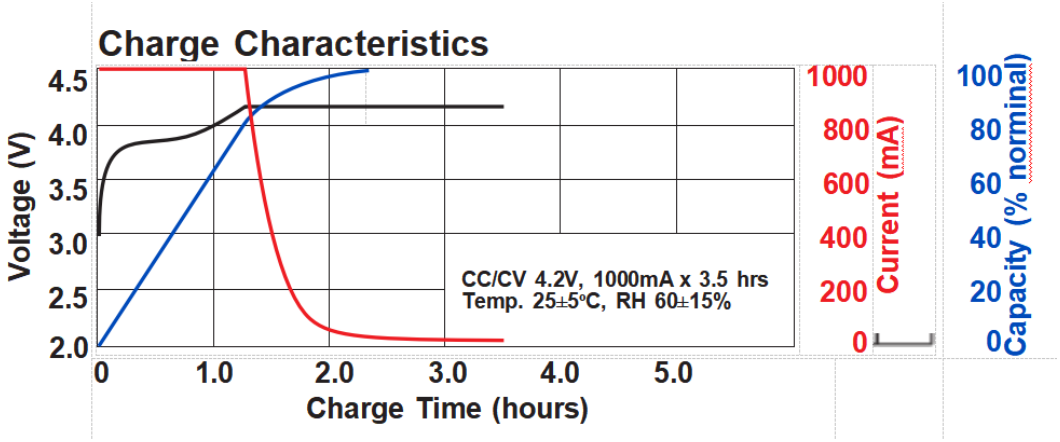

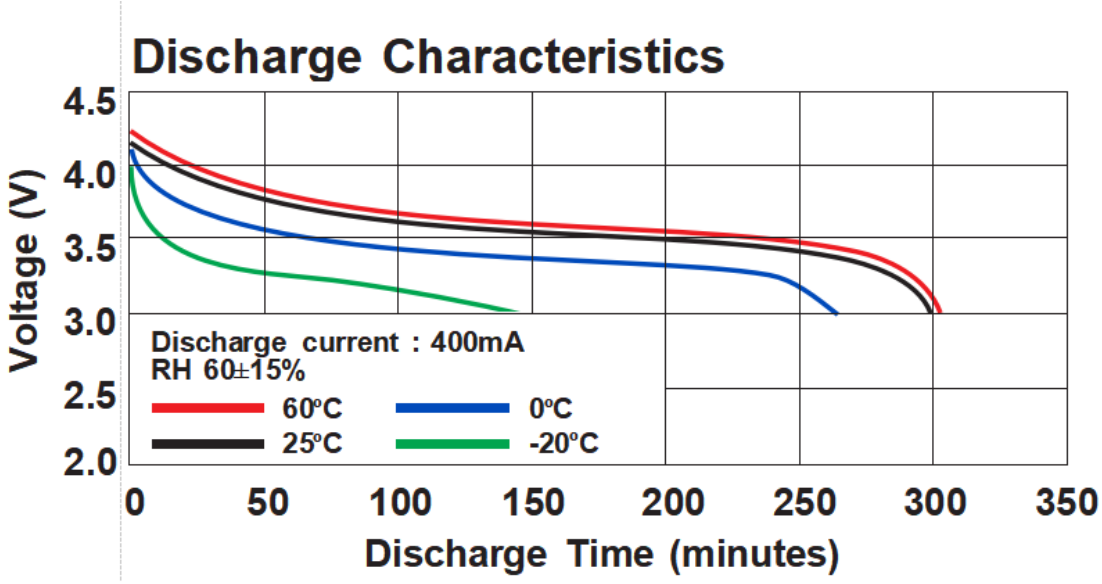

ANNOUNCEMENT

- Never charge a LiPo battery while it is inside your model or other electronic device. If it catches fire, it can lead to total destruction of the item inside which it is being charged.
- Store batteries in a location with low humidity, free from corrosive gas & combustible materials, within the temperature range of 14˚F (-10˚C) and 104˚F (40˚C). For best results, storage between from 41˚F (5˚C) and 77˚F (25˚C) is recommended.
- Never use a charger that is NOT specifically designed to charge Lithium Polymer cells.
- Never charge Batteries inside of the model.
- Always charge the battery in an isolated safe area away from any flammable/combustible materials. Never charge a LiPo battery on a wooden workbench, inside an automobile,or on any flammable surface. Charge LiPo batteries on a concrete surface where there are no flammable objects within 10 feet (3 meters) of the charging area. Always charge your LiPo battery in a fireproof container.
- Insulate all battery terminals on batteries to be disposed of.
- Do not charge dissimilar or un-matched packs in series or parallel with any difference in cell type, cell capacity, manufacturer, age, pack capacity or charge state (+/0.03V per cell). If in any doubt, always charge them separately.
- Never overcharge Batteries beyond the capacity listed on Batteries labels.
- NEVER leave your LiPo battery unattended while charging.
- When charging a LiPo battery always use LiPo Safety Bag (Flame retardant).
- Keep Lipo batteries away from heal! And direct sunlight, and do not Store ma car during hot weather. Never use a Lipo that is leaking or gives off a strong odor, or has been damaged many way.