3.7V Lithium Polymer Battery Data Sheet

Model: 306291

Please Find More:

https://www.fpbattery.com/3-7v-1700mah-lithium-polymer-battery/

File Number: A/FP6291-11581

File Version: 01

CONTACT

CUSTOMER SERVICE
86.755.3682.7358
sales@fpbattery.com
Hours of Operation:
9:00am-6:00pm CST, Monday to Friday

LEARN MORE ON:
https://www.fpbattery.com/

DNK POWER COMPANY LIMITED

BATTERY SPECIFICATION

Part Number	DNK 306291
Nominal Voltage	3.7 V
Nominal Capacity	1700 mAh
Internal Impedence	<60mΩ
Charge Voltage	4.2V
Recommended Charge Current	0.2 C
Allowed Max Charge Current	0.5 C
Output Voltage Range	4.2 - 2.5 V
Recommended Discharge Current	0.2 C
Max Continuous Discharge Current	1 C
Pulse Discharge Current	3 C (10 mS)
Discharge Cut-off Voltage	2.5± 0.05V
Cycle Life to 80% Health	500 (0.2C, 25°C)

1

1 YEAR WARRANTY

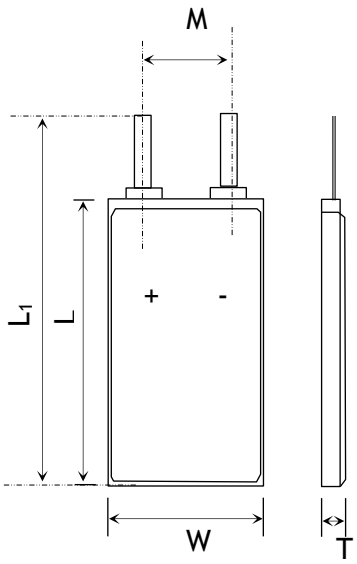

Item	Parameter (mm)
T	3
W	62
M	10
L	91
L_1	93
BL	93 ± 1
CL	100

ENVIRONMENTAL SPECIFICATIONS

Charging Temperature Range	0 - 45°C
Discharging Temperature Range	-20 - 60°C
Storage Period 1 Week	-20 - 45°C
Storage Period 1 Month	-10 - 45°C
Storage Period 6 Months	0 - 35°C

BATTERY PROTECTION

Over Charge	4.275 ± 50mV
Over Discharge	2.5V ± 50mV
Over Current	3A to 5A
Short Circuit	Yes

MECHANICAL SPECIFICATIONS

Dimensions	93x 62 x 3 mm(L*W*T)
Weight	Around 28 g
Battery Terminals	WC/ FL *

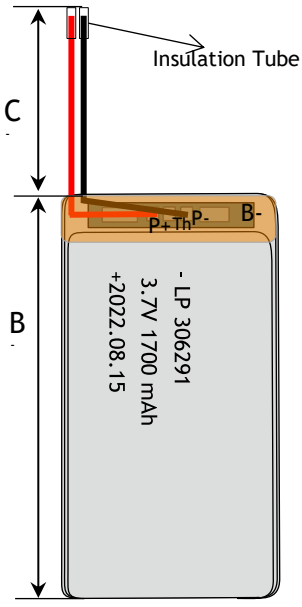

Kapton Tape



CERTIFICATION

Certification Approval	PLEASE CONSULT SALES

* WC=With Connector FL=Flying Leads UWP=Blue Wrapped PVC BWP=Black Wrapped PVC BC= Bare Cell

RELATIVE CURVES

Charge Characteristics

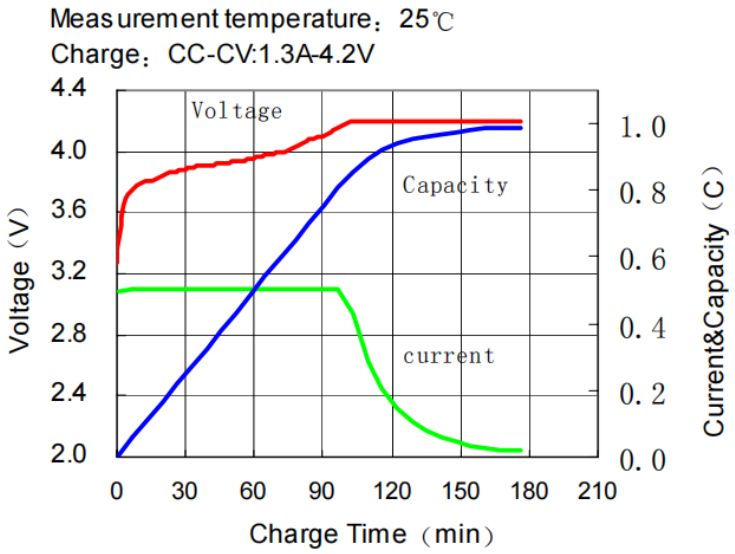

Rate Discharge Characteristics

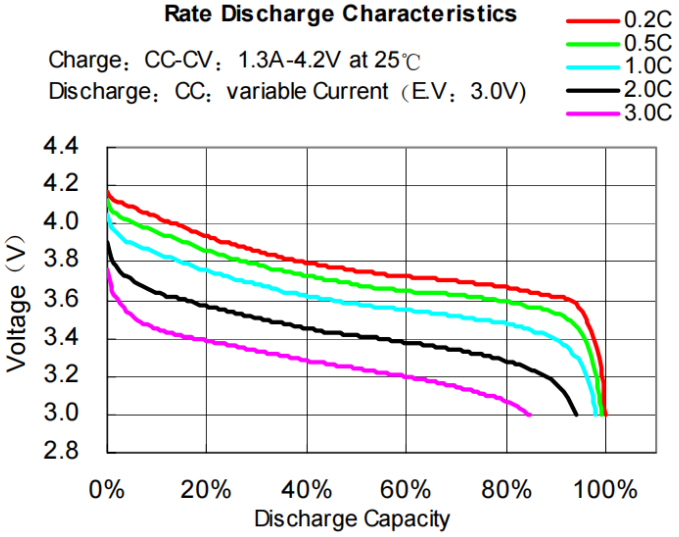

ANNOUNCEMENT

- Do not leave Lipo batteries unattended while charging.
- Only use chargers provided by and/or approved by the manufacturer.
- Never charge a battery that shows signs of puffing.
- Do not use the battery during charging to avoid overheating and safety accidents.
- Always use a compatible balanced mode charger, specifically designed for the chemistry of battery you are using.
- Do not apply excessive mechanical stress to the battery.
- Never leave batteries unattended where they can be damaged by someone.
- Do not charge Lipo batteries inside a car. Do not charge Lipo batteries inside a RC model.
- Do not dispose of the battery in the regular trash.
- Avoid placing the battery near sources of ignition.
- Ensure that charging leads are connected correctly. Reverse charging can lead to cell damage, fire or explosion.