3.7V Lithium Polymer Battery Data Sheet

Model: 306095

Please Find More:

https://www.fpbattery.com/3-7v-1700mah-lithium-polymer-battery/

File Number: A/FP6095-13659

File Version: 01

CONTACT

CUSTOMER SERVICE
86.755.3682.7358
sales@fpbattery.com
Hours of Operation:
9:00am-6:00pm CST, Monday to Friday

LEARN MORE ON:
https://www.fpbattery.com/

DNK POWER COMPANY LIMITED

BATTERY SPECIFICATION

Part Number	DNK 306095
Nominal Voltage	3.7 V
Nominal Capacity	1700 mAh
Internal Impedence	<60mΩ
Charge Voltage	4.2V
Recommended Charge Current	0.2 C
Allowed Max Charge Current	0.5 C
Output Voltage Range	4.2 - 2.5 V
Recommended Discharge Current	0.2 C
Max Continuous Discharge Current	1 C
Pulse Discharge Current	3 C (10 mS)
Discharge Cut-off Voltage	2.5± 0.05V
Cycle Life to 80% Health	500 (0.2C, 25°C)

1

1 YEAR WARRANTY

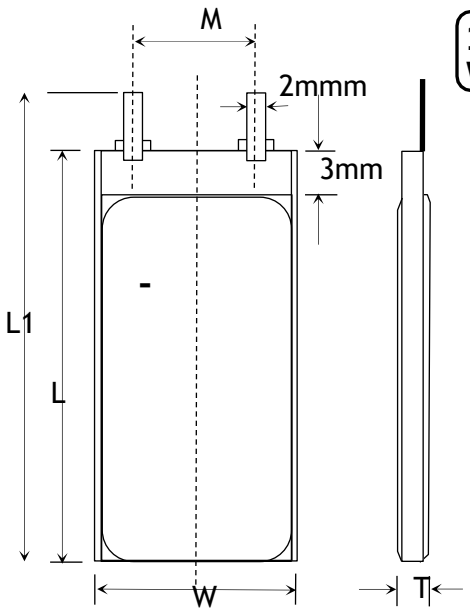

Item	Parameter (mm)
T	3
W	60
M	10
L	95
L_1	97
BL	97 ± 1
CL	100

ENVIRONMENTAL SPECIFICATIONS

Charging Temperature Range	0 - 45°C
Discharging Temperature Range	-20 - 60°C
Storage Period 1 Week	-20 - 45°C
Storage Period 1 Month	-10 - 45°C
Storage Period 6 Months	0 - 35°C

BATTERY PROTECTION

Over Charge	4.275 ± 50mV
Over Discharge	2.5V ± 50mV
Over Current	3A to 5A
Short Circuit	Yes

MECHANICAL SPECIFICATIONS

Dimensions	97x 60 x 3 mm(L*W*T)
Weight	Around 28 g
Battery Terminals	WC/ FL *

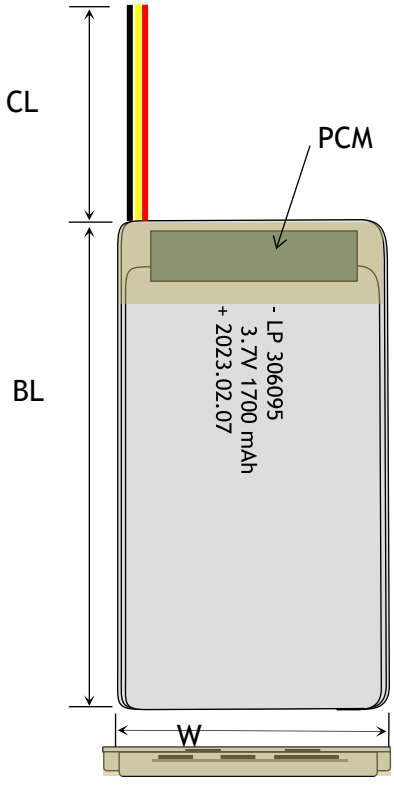

CERTIFICATION

Certification Approval	PLEASE CONSULT SALES

* WC=With Connector FL=Flying Leads UWP=Blue Wrapped PVC
BWP=Black Wrapped PVC BC= Bare Cell

RELATIVE CURVES

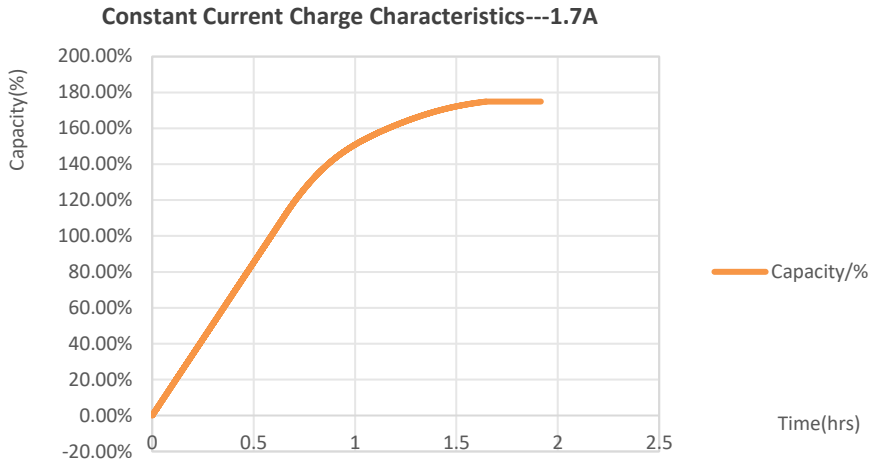

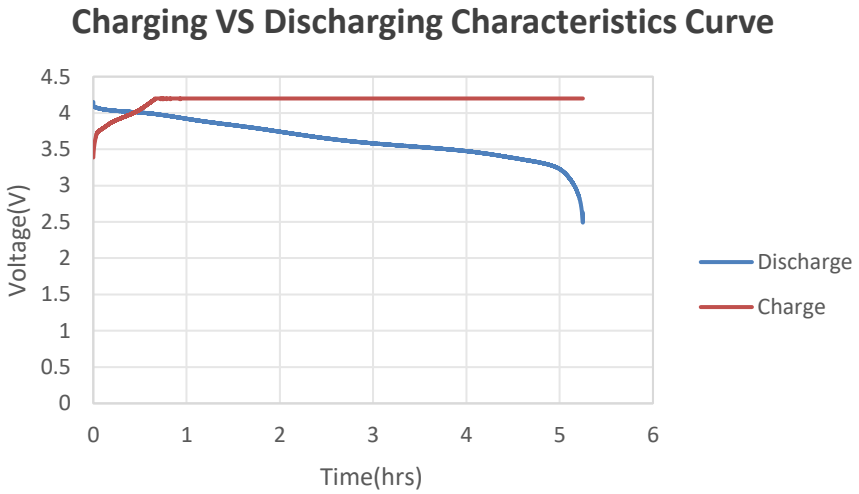

ANNOUNCEMENT

- Regularly check the battery case for leaks or damage.
- l When charging LiPo batteries, they must be charged at the voltage of the number of cells in series. Example: A 5s4p pack must be charged as a 5 cell pack.
- Never charge a lithium polymer battery pack that has been punctured or damaged in a crash.
- In premises that also provide sleeping accommodation, serious consideration should be given, wherever practicable, to using timers to control socket outlets used for charging equipment
- Never leave batteries unattended where they can be damaged by someone.
- Avoid frequent charging and discharging on the way to using the battery.
- Never keep sharp objects near Lipos. This may cause a hole in the pack and can lead to a fire.
- Use a dedicated lithium polymer battery charger and ensure that it meets the charging requirements of the battery.
- Charge only with an approved LiPo charger, according to the parameters for the particular battery
- ALWAYS tape over the terminals/contacts of each battery (a fire can start if battery terminals come into contact with each other or other metallic items in the area).
- Always use a compatible balanced mode charger, specifically designed for the chemistry of battery you are using.