3.7V Lithium Polymer Battery Data Sheet

Model: 306094

Please Find More:

https://www.fpbattery.com/3-7v-1700mah-lithium-polymer-battery/

File Number: A/FP6094-13386

File Version: 01

CONTACT

CUSTOMER SERVICE
86.755.3682.7358
sales@fpbattery.com
Hours of Operation:
9:00am-6:00pm CST, Monday to Friday

LEARN MORE ON:
https://www.fpbattery.com/

DNK POWER COMPANY LIMITED

BATTERY SPECIFICATION

Part Number	DNK 306094
Nominal Voltage	3.7 V
Nominal Capacity	1700 mAh
Internal Impedence	<60mΩ
Charge Voltage	4.2V
Recommended Charge Current	0.2 C
Allowed Max Charge Current	0.5 C
Output Voltage Range	4.2 - 2.5 V
Recommended Discharge Current	0.2 C
Max Continuous Discharge Current	1 C
Pulse Discharge Current	3 C (10 mS)
Discharge Cut-off Voltage	2.5± 0.05V
Cycle Life to 80% Health	500 (0.2C, 25°C)

1

1 YEAR WARRANTY

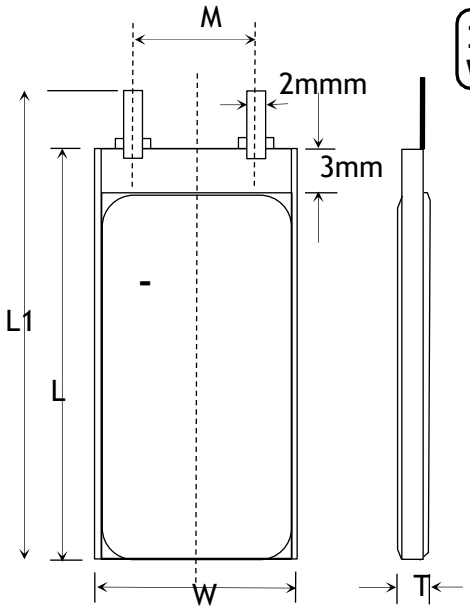

Item	Parameter (mm)
T	3
W	60
M	10
L	94
L_1	96
BL	96 ± 1
CL	100

ENVIRONMENTAL SPECIFICATIONS

Charging Temperature Range	0 - 45°C
Discharging Temperature Range	-20 - 60°C
Storage Period 1 Week	-20 - 45°C
Storage Period 1 Month	-10 - 45°C
Storage Period 6 Months	0 - 35°C

BATTERY PROTECTION

Over Charge	4.275 ± 50mV
Over Discharge	2.5V ± 50mV
Over Current	3A to 5A
Short Circuit	Yes

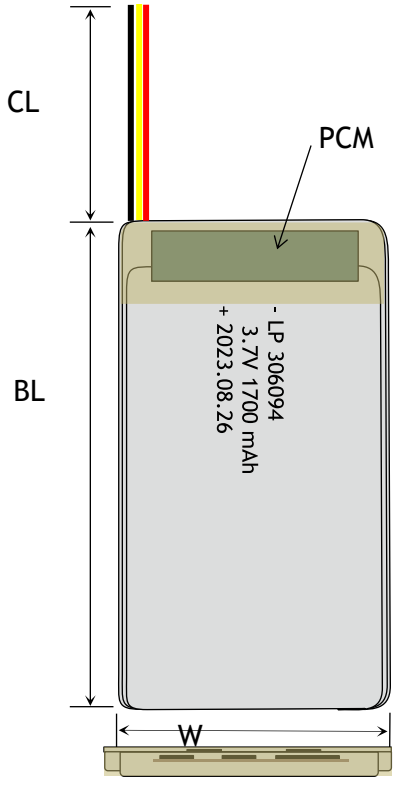

MECHANICAL SPECIFICATIONS

Dimensions	96x 60 x 3 mm(L*W*T)
Weight	Around 28 g
Battery Terminals	WC/ FL *

CERTIFICATION

Certification Approval	PLEASE CONSULT SALES

* WC=With Connector FL=Flying Leads UWP=Blue Wrapped PVC BWP=Black Wrapped PVC BC= Bare Cell

RELATIVE CURVES

Constant Current Charge Characteristics---1.7A

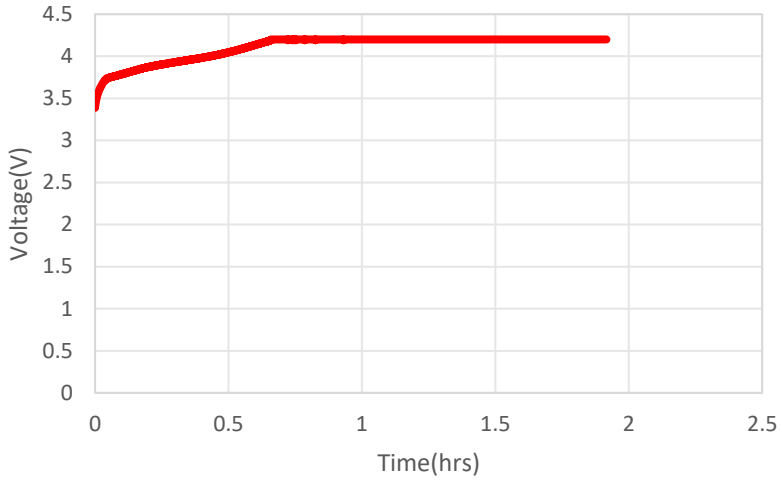

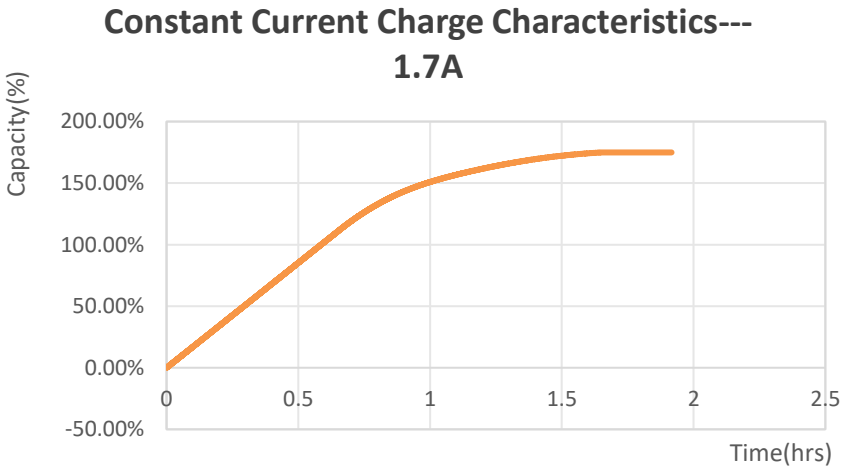

ANNOUNCEMENT

- Avoid storing the battery in a hot environment.
- The battery must be charged to an ambient temperature of 10°C~45°C.
- Do not use damaged battery connectors.
- Before starting work, if you are designing wearables using lithium-ion batteries, make sure they are easily removeable if they start to react while being worn.
- Use recommended methods to make battery terminal connections.
- Discharge the battery to 50% before storing it for an extended period of time.
- Check cell voltage after the first charge to verify that the voltage has not exceeded the maximum charge voltage (Please refer to Chart 1). Check the voltage of each cell via the balance connector to verify that the voltage of each cell has not exceeded the maximum value.
- If the electrolyte in the cells gets on your skin, wash the area thoroughly with soap and water. If it gets in your eyes, rinse at emergency eyewash station for 15 minutes with cool water and seek immediate medical attention.
- Avoid using chargers with long charging times.
- Never charge a damaged or inflated battery.
- Never charge a LiPo battery while it is inside your model or other electronic device. If it catches fire, it can lead to total destruction of the item inside which it is being charged.