3.7V Lithium Polymer Battery Data Sheet

Model: 306071

Please Find More:

https://www.fpbattery.com/3-7v-1300mah-lithium-polymer-battery/

File Number: A/FP6071-6025

File Version: 01

CONTACT

CUSTOMER SERVICE
86.755.3682.7358
sales@fpbattery.com
Hours of Operation:
9:00am-6:00pm CST, Monday to Friday

LEARN MORE ON:
https://www.fpbattery.com/

DNK POWER COMPANY LIMITED

BATTERY SPECIFICATION

Part Number	DNK 306071
Nominal Voltage	3.7 V
Nominal Capacity	1300 mAh
Internal Impedence	<60mΩ
Charge Voltage	4.2V
Recommended Charge Current	0.2 C
Allowed Max Charge Current	0.5 C
Output Voltage Range	4.2 - 2.5 V
Recommended Discharge Current	0.2 C
Max Continuous Discharge Current	1 C
Pulse Discharge Current	3 C (10 mS)
Discharge Cut-off Voltage	2.5± 0.05V
Cycle Life to 80% Health	500 (0.2C, 25°C)

1

1 YEAR WARRANTY

Inflex and soler

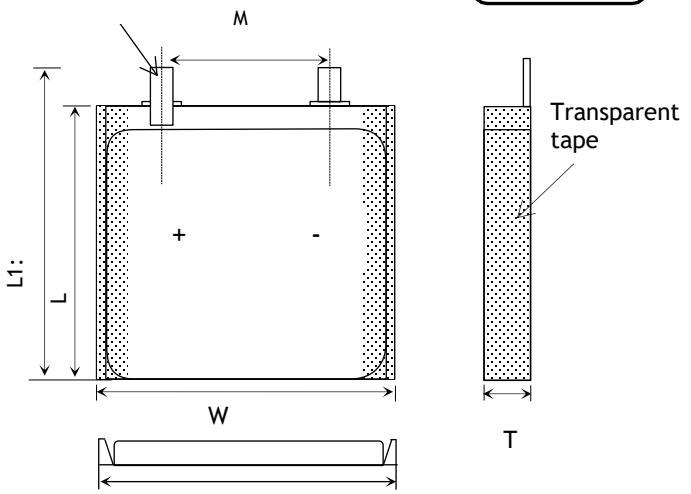

Item	Parameter (mm)
T	3
W	60
M	10
L	71
L_1	73
BL	73 ± 1
CL	100

ENVIRONMENTAL SPECIFICATIONS

Charging Temperature Range	0 - 45°C
Discharging Temperature Range	-20 - 60°C
Storage Period 1 Week	-20 - 45°C
Storage Period 1 Month	-10 - 45°C
Storage Period 6 Months	0 - 35°C

BATTERY PROTECTION

Over Charge	4.275 ± 50mV
Over Discharge	2.5V ± 50mV
Over Current	3A to 5A
Short Circuit	Yes

MECHANICAL SPECIFICATIONS

Dimensions	73x 60 x 3 mm(L*W*T)
Weight	Around 21 g
Battery Terminals	WC/ FL *

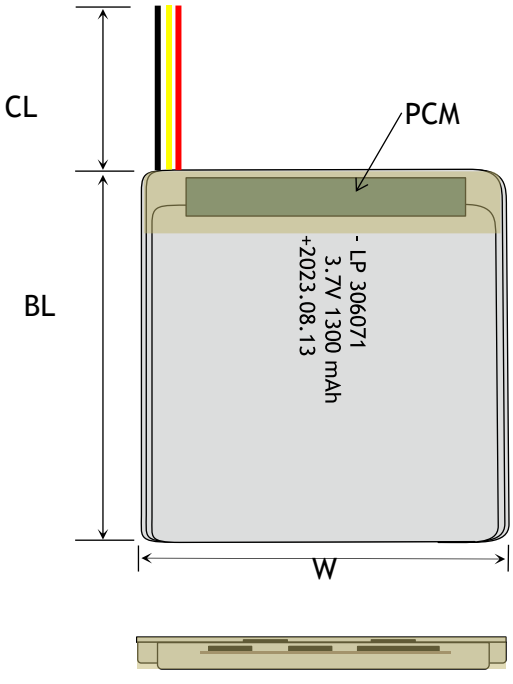

CERTIFICATION

Certification Approval	PLEASE CONSULT SALES

* aWC=With Connector FL=Flying Leads UWP=Blue Wrapped PVC
BWP=Black Wrapped PVC BC= Bare Cell

BULK PRODUCTION ACTUAL PICTURES



BARE CELL (BC)



FLYING LEADS (FL)



WITH CONNECTOR (WC)



BLUE WRAPPED PVC (UWP)



BLACK WRAPPED PVC (BWP)

3.7V LIPO BATTERY OPTIONS



Special Ingredients to make batteries work from -40 -85 ° C



Discharging Current up to 100C



Popular JST,Molex,Hirose,Anderson available



LED Power Indicator



Power Button



Upgrade to LifePo4 tech and life circle up to 1500

RELATIVE CURVES

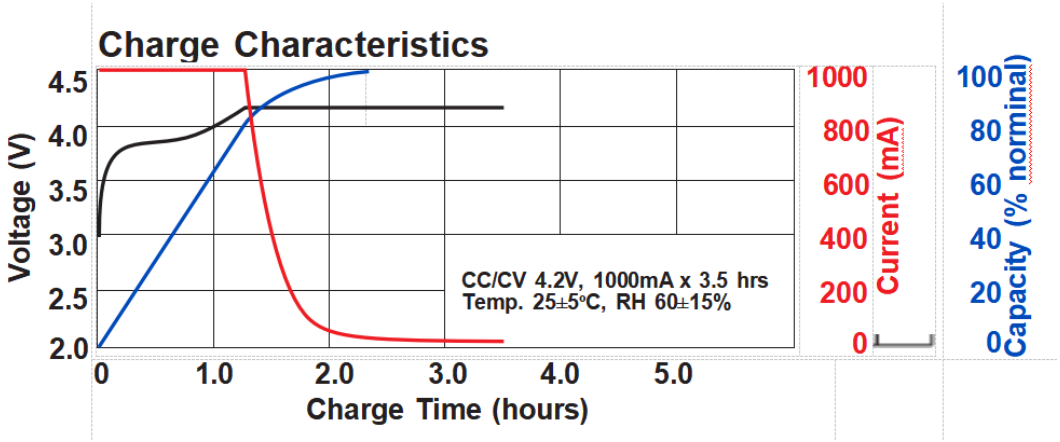

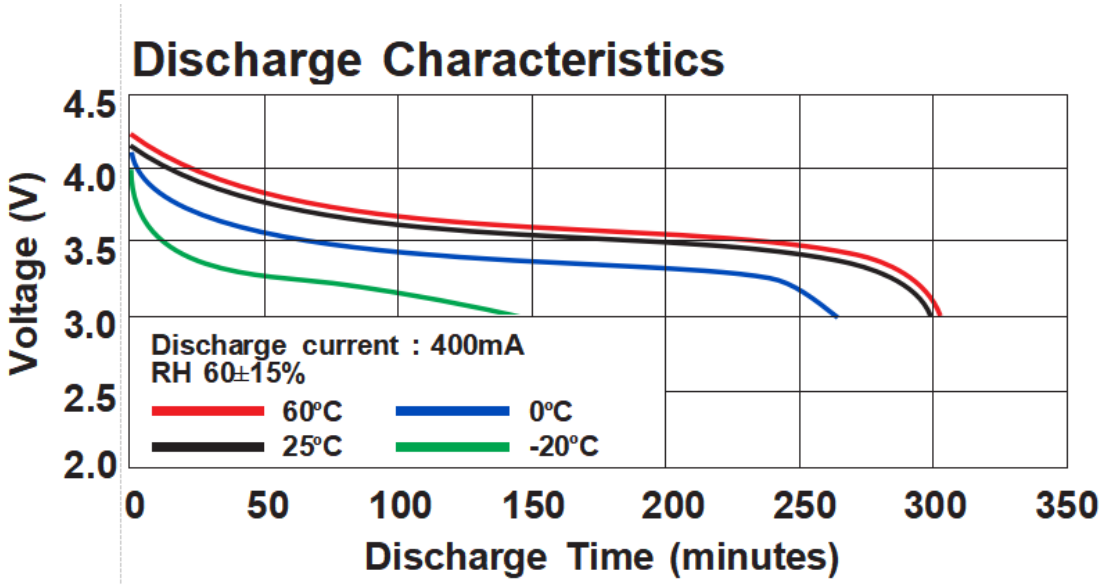

ANNOUNCEMENT

- Do not touch the battery to materials that are easily conductive.
- Do not approach the cell until it reaches room temperature. The cell temperature can be checked using a remote device (i.e. infrared thermometer).
- Do not dispose of the battery in the regular trash.
- Never put batteries in your pocket or non fireproof bags this may cause the battery to short circuit.
- Immediately disconnect the batteries if, during operation or charging, they emit an unusual smell, develop heat, change shape/geometry, or behave abnormally.
- Do not disassemble and damage the battery.
- Make sure the device is turned off before disconnecting the power.
- Always consult the manufacturerGspecific battery manual for proper instructions.
- When the battery is empty, recharge it immediately. Do not store an empty battery, the battery will continue to discharge, it will fall below the minimum voltage and become unusable.
- Higher cell voltage during storage will increase the self-discharge rate of the battery, which may lead to over-discharge and deteriorate battery performance. It is recommended that the battery remain at a lower voltage (about 3.8V/cell) throughout the period of storage. If the battery is to be stored for longer than one year, the user should charge the battery at least once per year to 3.8V/cell to prevent over-discharge.
- Do not discharge the battery at a higher current than the maximum continuous discharging current. A higher discharging current may cause overheating which will lead to ballooning, swelling, or possibly result in fire. For example, a 5000mAh battery with a designed maximum 35C discharge

current must not have a continuous discharge rate or load of more than 175 Amps. For longer cycle life, a continuous discharging current of 70%-80% of the designed maximum discharging current is acceptable and recommended.