3.7V Lithium Polymer Battery Data Sheet

Model: 305889

Please Find More:

https://www.fpbattery.com/1500mah-lithium-polymer-battery/

File Number: A/FP5889-12798

File Version: 01

CONTACT

CUSTOMER SERVICE
86.755.3682.7358
sales@fpbattery.com
Hours of Operation:
9:00am-6:00pm CST, Monday to Friday

LEARN MORE ON:
https://www.fpbattery.com/

DNK POWER COMPANY LIMITED

BATTERY SPECIFICATION

Part Number	DNK 305889
Nominal Voltage	3.7 V
Nominal Capacity	1500 mAh
Internal Impedence	<60mΩ
Charge Voltage	4.2V
Recommended Charge Current	0.2 C
Allowed Max Charge Current	0.5 C
Output Voltage Range	4.2 - 2.5 V
Recommended Discharge Current	0.2 C
Max Continuous Discharge Current	1 C
Pulse Discharge Current	3 C (10 mS)
Discharge Cut-off Voltage	2.5± 0.05V
Cycle Life to 80% Health	500 (0.2C, 25°C)

1

1 YEAR WARRANTY

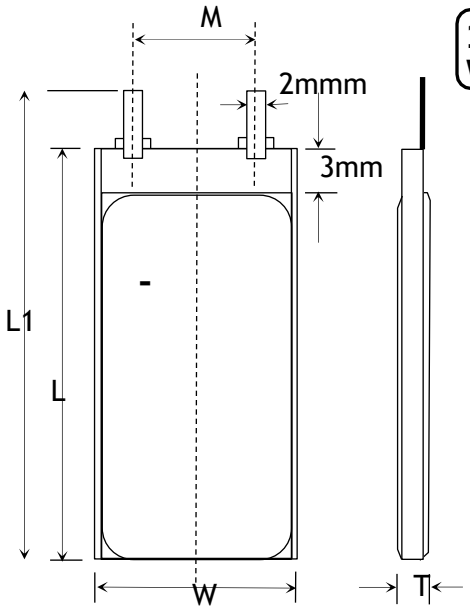

Item	Parameter (mm)
T	3
W	58
M	10
L	89
L_1	91
BL	91 ± 1
CL	100

ENVIRONMENTAL SPECIFICATIONS

Charging Temperature Range	0 - 45°C
Discharging Temperature Range	-20 - 60°C
Storage Period 1 Week	-20 - 45°C
Storage Period 1 Month	-10 - 45°C
Storage Period 6 Months	0 - 35°C

BATTERY PROTECTION

Over Charge	4.275 ± 50mV
Over Discharge	2.5V ± 50mV
Over Current	3A to 5A
Short Circuit	Yes

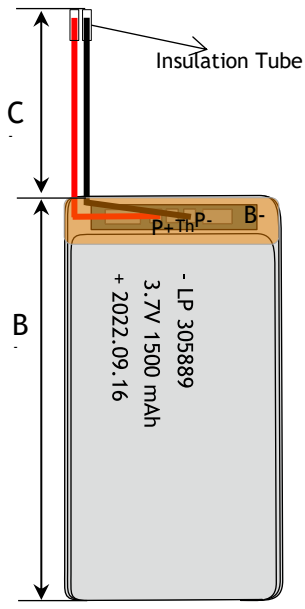

MECHANICAL SPECIFICATIONS

Dimensions	91x 58 x 3 mm(L*W*T)
Weight	Around 25 g
Battery Terminals	WC/ FL *

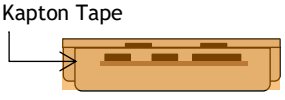

CERTIFICATION

Certification Approval	PLEASE CONSULT SALES

* WC=With Connector FL=Flying Leads UWP=Blue Wrapped PVC BWP=Black Wrapped PVC BC= Bare Cell

BULK PRODUCTION ACTUAL PICTURES



BARE CELL (BC)



FLYING LEADS (FL)



WITH CONNECTOR (WC)



BLUE WRAPPED PVC (UWP)



BLACK WRAPPED PVC (BWP)

3.7V LIPO BATTERY OPTIONS

Special Ingredients to make batteries work from -40 -85 ° C

Discharging Current up to 100C

Popular JST,Molex,Hirose,Anderson available

LED Power Indicator

Power Button

RELATIVE CURVES

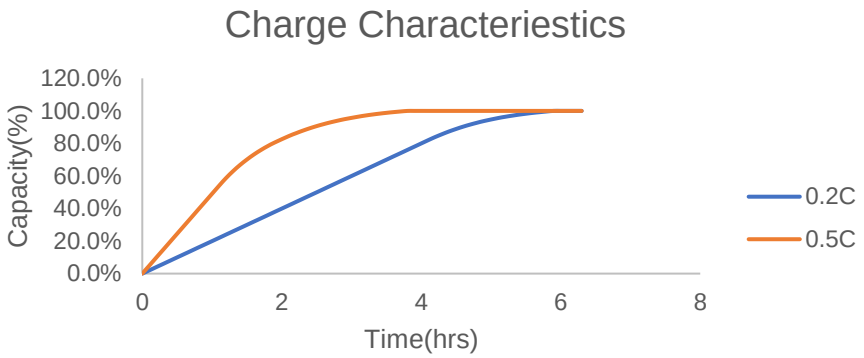

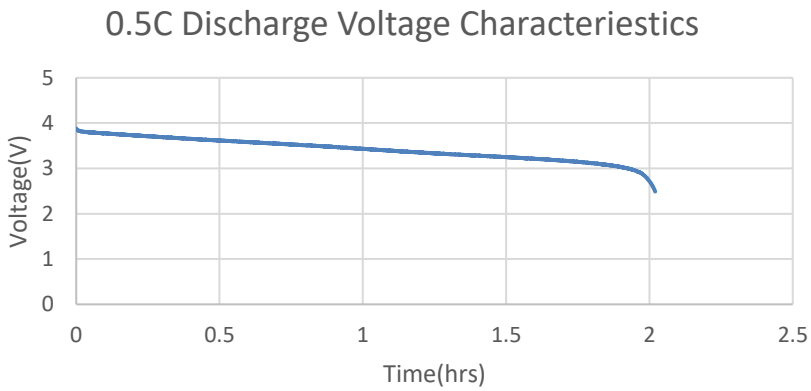

ANNOUNCEMENT

- Avoid physical damage and short circuiting.
- Obtain recycling container from EHRS for all batteries except LiPo.
- Ensure that you choose a regular and reputable supplier before purchasing.
- Do not use a damaged charger that could cause the battery to overcharge or over discharge.
- Always remove your LiPo battery from your model while charging. Remove the battery from you model and allow it to cool to ambient temperature before re-charging.
- Do not charge Lipo batteries inside a car. Do not charge Lipo batteries inside a RC model.
- Do not charge Lipo batteries inside a car. Do not charge Lipo batteries inside a RC model.
- Do not overcharge the battery and observe the charger and battery charge time instructions.
- If the battery develops an abnormal condition, stop using it immediately.
- Do not charge hot cells after use. Warm cells are OK. Always let hot cells cool before charging.
- Never store or charge the battery inside your car or in extreme temperatures. Extreme temperatures might ignite the battery and cause fire. 7) Store the battery in a location inaccessible to children. Be sure that children do not remove the battery from the charger or model.