3.7V Lithium Polymer Battery Data Sheet

Model: 3058110

Please Find More:

https://www.fpbattery.com/3-7v-12000mah-lithium-polymer-battery/

File Number: A/FP58110-18045

File Version: 01

CONTACT

CUSTOMER SERVICE
86.755.3682.7358
sales@fpbattery.com
Hours of Operation:
9:00am-6:00pm CST, Monday to Friday

LEARN MORE ON:
https://www.fpbattery.com/

DNK POWER COMPANY LIMITED

BATTERY SPECIFICATION

Part Number	DNK 3058110
Nominal Voltage	3.7 V
Nominal Capacity	1900 mAh
Internal Impedence	<60mΩ
Charge Voltage	4.2V
Recommended Charge Current	0.2 C
Allowed Max Charge Current	0.5 C
Output Voltage Range	4.2 - 2.5 V
Recommended Discharge Current	0.2 C
Max Continuous Discharge Current	1 C
Pulse Discharge Current	3 C (10 mS)
Discharge Cut-off Voltage	2.5± 0.05V
Cycle Life to 80% Health	500 (0.2C, 25°C)

1

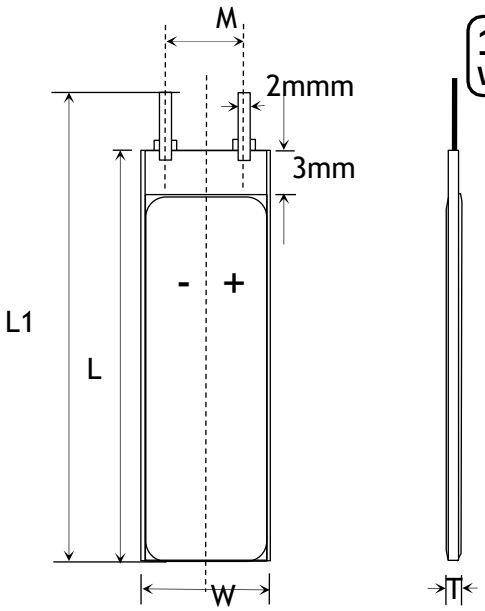

1 YEAR WARRANTY

Item	Parameter (mm)
T	3
W	58
M	10
L	110
L_1	112
BL	112 ± 1
CL	100

ENVIRONMENTAL SPECIFICATIONS

Charging Temperature Range	0 - 45°C
Discharging Temperature Range	-20 - 60°C
Storage Period 1 Week	-20 - 45°C
Storage Period 1 Month	-10 - 45°C
Storage Period 6 Months	0 - 35°C

BATTERY PROTECTION

Over Charge	4.275 ± 50mV
Over Discharge	2.5V ± 50mV
Over Current	3A to 5A
Short Circuit	Yes

MECHANICAL SPECIFICATIONS

Dimensions	112x 58 x 3 mm(L*W*T)
Weight	Around 31 g
Battery Terminals	WC/ FL *

CERTIFICATION

Certification Approval	PLEASE CONSULT SALES

* WC=With Connector FL=Flying Leads UWP=Blue Wrapped PVC BWP=Black Wrapped PVC BC= Bare Cell

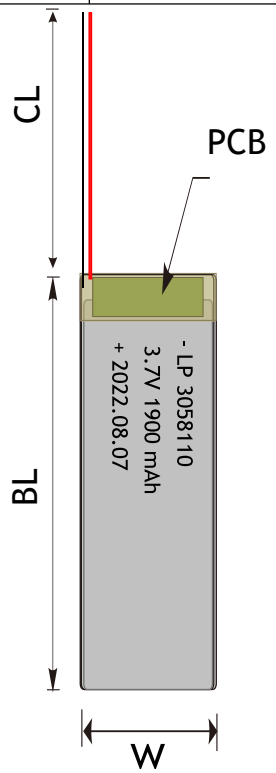

RELATIVE CURVES

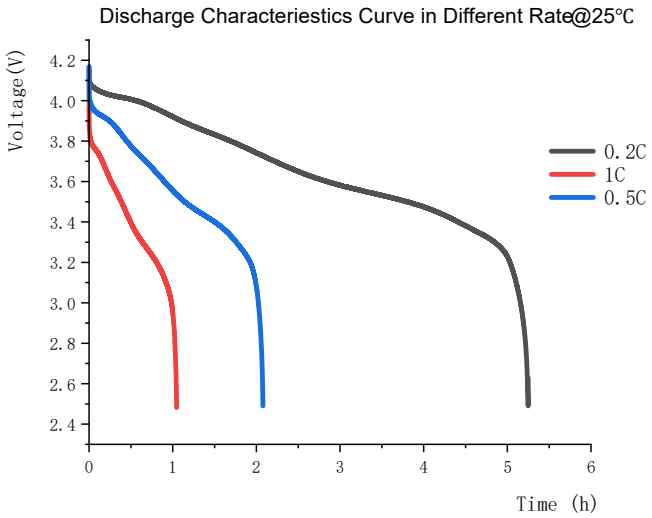

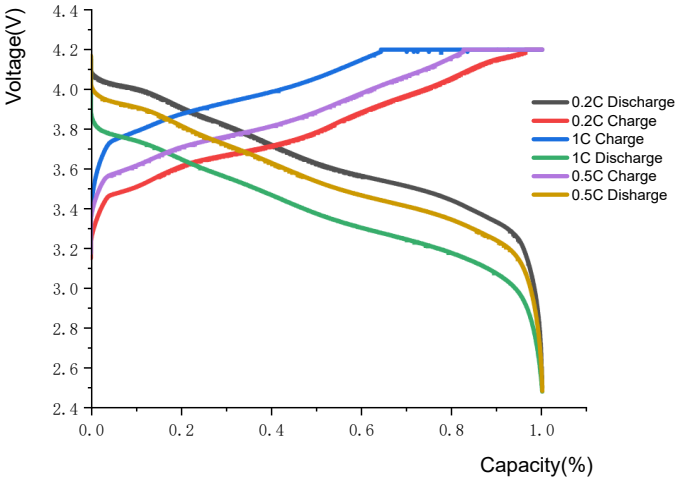

ANNOUNCEMENT

- The discharge temperature range is between 32°F (0°C) and 113°F (45°C).
- Place batteries suspected of being damaged into the emergency battery isolation container and monitor temperature.
- If taking lithium batteries on an aircraft, follow FAA and IATA rules.
- Avoid purchasing low quality batteries to avoid accidents.
- Avoid prolonged exposure to high temperatures
- Clean the battery connectors regularly to maintain good contact performance.
- Have a class ABC or CO2 fire extinguisher nearby the storage area.
- Use a reliable power adapter to avoid unstable current output.
- DO NOT make or build your own charging circuit.
- If you start seeing any physical changes to the battery while charging example puffing, STOP charging immediately and dispose of the battery responsibly.
- Clean the battery connectors regularly to maintain good contact performance.