3.7V Lithium Polymer Battery Data Sheet

Model: 305675

Please Find More:

https://www.fpbattery.com/3-7v-1300mah-lithium-polymer-battery/

File Number: A/FP5675-9298

File Version: 01

CONTACT

CUSTOMER SERVICE
86.755.3682.7358
sales@fpbattery.com
Hours of Operation:
9:00am-6:00pm CST, Monday to Friday

LEARN MORE ON:
https://www.fpbattery.com/

DNK POWER COMPANY LIMITED

BATTERY SPECIFICATION

Part Number	DNK 305675
Nominal Voltage	3.7 V
Nominal Capacity	1300 mAh
Internal Impedence	<60mΩ
Charge Voltage	4.2V
Recommended Charge Current	0.2 C
Allowed Max Charge Current	0.5 C
Output Voltage Range	4.2 - 2.5 V
Recommended Discharge Current	0.2 C
Max Continuous Discharge Current	1 C
Pulse Discharge Current	3 C (10 mS)
Discharge Cut-off Voltage	2.5± 0.05V
Cycle Life to 80% Health	500 (0.2C, 25°C)

1

ENVIRONMENTAL SPECIFICATIONS

Charging Temperature Range	0 - 45°C
Discharging Temperature Range	-20 - 60°C
Storage Period 1 Week	-20 - 45°C
Storage Period 1 Month	-10 - 45°C
Storage Period 6 Months	0 - 35°C

BATTERY PROTECTION

Over Charge	4.275 ± 50mV
Over Discharge	2.5V ± 50mV
Over Current	3A to 5A
Short Circuit	Yes

MECHANICAL SPECIFICATIONS

Dimensions	77x 56 x 3 mm(L*W*T)
Weight	Around 21 g
Battery Terminals	WC/ FL *

CERTIFICATION

Certification Approval	PLEASE CONSULT SALES

* WC=With Connector FL=Flying Leads UWP=Blue Wrapped PVC BWP=Black Wrapped PVC BC= Bare Cell

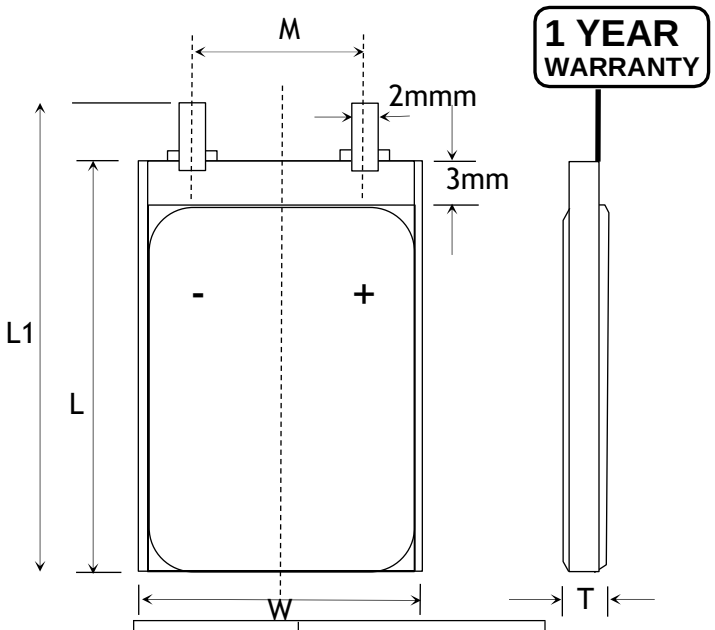

Item	Parameter (mm)
T	3
W	56
M	10
L	75
L_1	77
BL	77 ± 1
CL	100

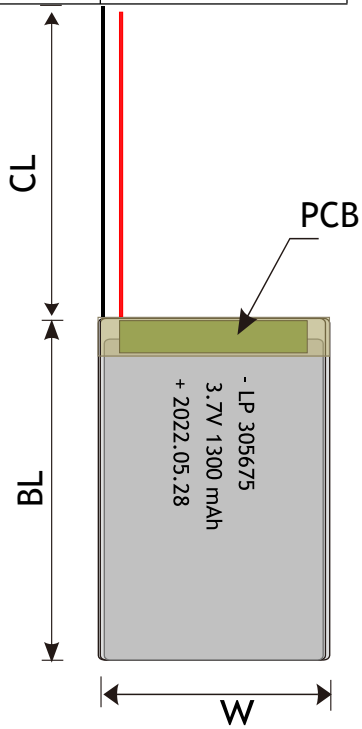

RELATIVE CURVES

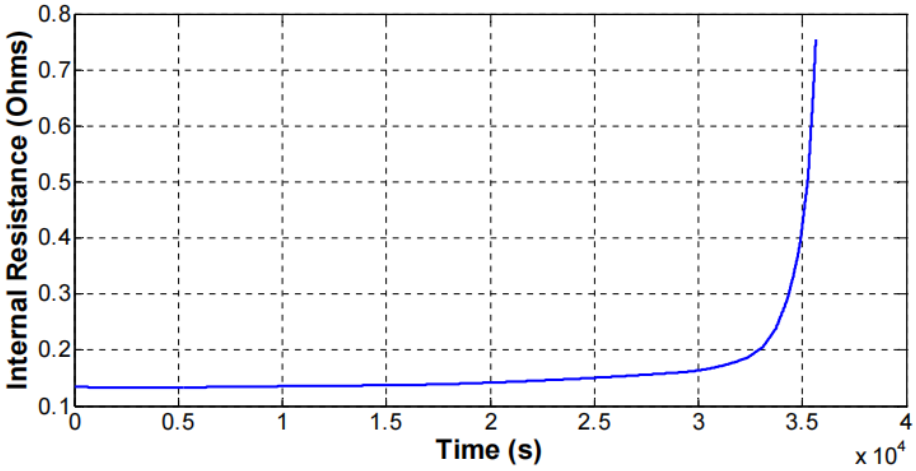

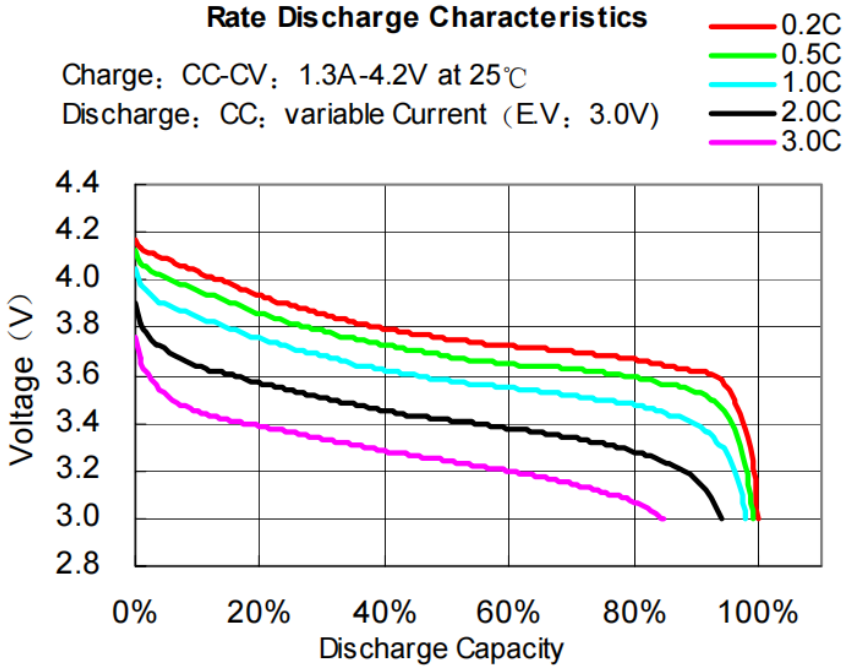

ANNOUNCEMENT

- Never put LiPo batteries or battery packs in pockets, drawers or bags where they might make contact with something made of metal. This can cause a short circuit.
- If at anytime you notice a cell "puff up", disconnect it immediately and cover it with a fire blanket, or put it in a non-conductive container and place it outside away from all flammable objects for at least 30 minutes as chemical reactions can take this long before a fire starts.
- The cells shall never be soaked with liquids such as water, seawater drinks such as soft drinks, juices coffee or others.
- The battery must be charged to an ambient temperature of 10°C~45°C.
- Obtain recycling container from EHRS for all batteries except LiPo.
- For best practice store standard lipo batteries at 3.80 volts +/.05 volts per cell. Or at the manufacturer's suggested storage voltage for non standard chemistry's
- In the event of a crash, remove battery(s) and place it/them in a safe open area away from any combustible materials for approximately 30 minutes. On no account should you place it in a vehicle for at least 30 minutes as a delayed chemical re-action can occur causing a fire.
- NEVER charge a device under a pillow, on a bed, on a carpet, on a couch, or other combustible material.
- Never charge a LiPo pack that has ballooned or swelled due to over/under charging or from a crash.
- Use low voltage cutoff switch or monitor battery voltage while in use on equipment. Do not allow voltage to drop below 3.0 volts.
- Avoid frequent charging and discharging on the way to using the battery.