3.7V Lithium Polymer Battery Data Sheet

Model: 305587

Please Find More:

https://www.fpbattery.com/3-7v-5500mah-lithium-polymer-battery/

File Number: A/FP5587-13643

File Version: 01

CONTACT

CUSTOMER SERVICE
86.755.3682.7358
sales@fpbattery.com
Hours of Operation:
9:00am-6:00pm CST, Monday to Friday

LEARN MORE ON:
https://www.fpbattery.com/

DNK POWER COMPANY LIMITED

BATTERY SPECIFICATION

Part Number	DNK 305587
Nominal Voltage	3.7 V
Nominal Capacity	1400 mAh
Internal Impedence	<60mΩ
Charge Voltage	4.2V
Recommended Charge Current	0.2 C
Allowed Max Charge Current	0.5 C
Output Voltage Range	4.2 - 2.5 V
Recommended Discharge Current	0.2 C
Max Continuous Discharge Current	1 C
Pulse Discharge Current	3 C (10 mS)
Discharge Cut-off Voltage	2.5± 0.05V
Cycle Life to 80% Health	500 (0.2C, 25°C)

1

1 YEAR WARRANTY

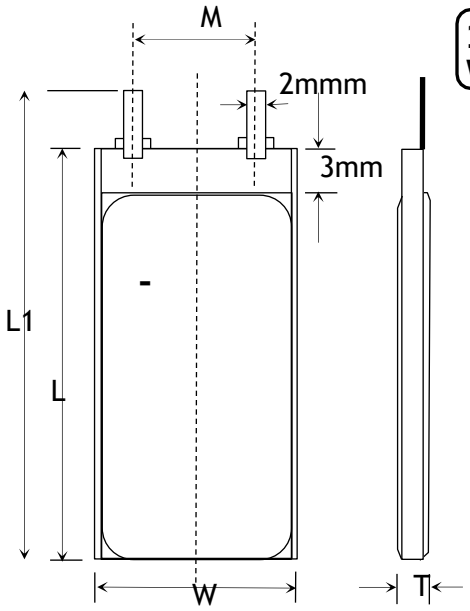

Item	Parameter (mm)
T	3
W	55
M	10
L	87
L_1	89
BL	89 ± 1
CL	100

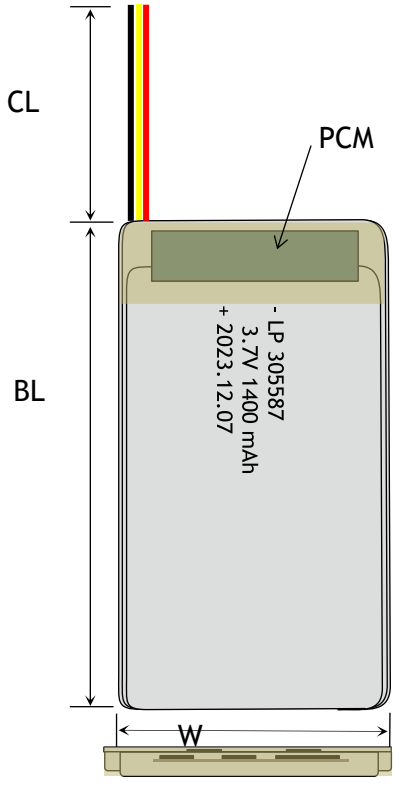

ENVIRONMENTAL SPECIFICATIONS

Charging Temperature Range	0 - 45°C
Discharging Temperature Range	-20 - 60°C
Storage Period 1 Week	-20 - 45°C
Storage Period 1 Month	-10 - 45°C
Storage Period 6 Months	0 - 35°C

BATTERY PROTECTION

Over Charge	4.275 ± 50mV
Over Discharge	2.5V ± 50mV
Over Current	3A to 5A
Short Circuit	Yes

MECHANICAL SPECIFICATIONS

Dimensions	89x 55 x 3 mm(L*W*T)
Weight	Around 23 g
Battery Terminals	WC/ FL *

CERTIFICATION

Certification Approval	PLEASE CONSULT SALES

* WC=With Connector FL=Flying Leads UWP=Blue Wrapped PVC BWP=Black Wrapped PVC BC= Bare Cell

RELATIVE CURVES

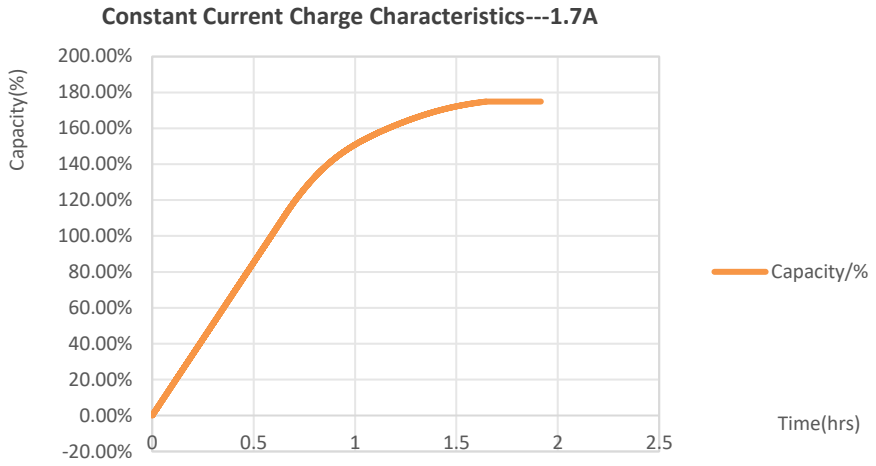

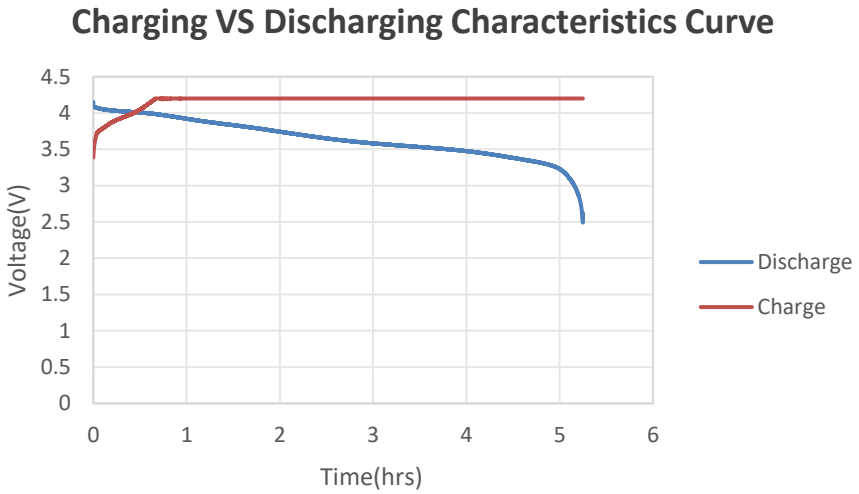

ANNOUNCEMENT

- Never charge a lithium polymer battery pack that has been punctured or damaged in a crash.
- Do not apply excessive mechanical stress to the battery.
- Do not approach the cell until it reaches room temperature. The cell temperature can be checked using a remote device (i.e. infrared thermometer).
- ALWAYS store batteries and devices at room temperature.
- Do not put batteries in contact with conductive materials, water, seawater, strong oxidizers
- Avoid prolonged use of the device with a low battery.
- Never charge a LiPo battery near an exit. Keep exit egress clear in case of a fire or emergency.
- Before starting work,make sure your Li-po batteries, chargers, and associated equipment are tested in accordance with an appropriate test standard (e.g., UL 2054), certified by a Nationally Recognized Testing Laboratory (NRTL), and rated for their intended uses.
- Avoid frequent shutdowns and restarts of the device on the way to using the battery.
- Do not apply sticky substances to the positive and negative terminals of the battery.
- Do not vibrate the battery excessively.