3.7V Lithium Polymer Battery Data Sheet

Model: 305586

Please Find More:

https://www.fpbattery.com/3-7v-5500mah-lithium-polymer-battery/

File Number: A/FP5586-13338

File Version: 01

CONTACT

CUSTOMER SERVICE
86.755.3682.7358
sales@fpbattery.com
Hours of Operation:
9:00am-6:00pm CST, Monday to Friday

LEARN MORE ON:
https://www.fpbattery.com/

DNK POWER COMPANY LIMITED

BATTERY SPECIFICATION

Part Number	DNK 305586
Nominal Voltage	3.7 V
Nominal Capacity	1400 mAh
Internal Impedence	<60mΩ
Charge Voltage	4.2V
Recommended Charge Current	0.2 C
Allowed Max Charge Current	0.5 C
Output Voltage Range	4.2 - 2.5 V
Recommended Discharge Current	0.2 C
Max Continuous Discharge Current	1 C
Pulse Discharge Current	3 C (10 mS)
Discharge Cut-off Voltage	2.5± 0.05V
Cycle Life to 80% Health	500 (0.2C, 25°C)

1

1 YEAR WARRANTY

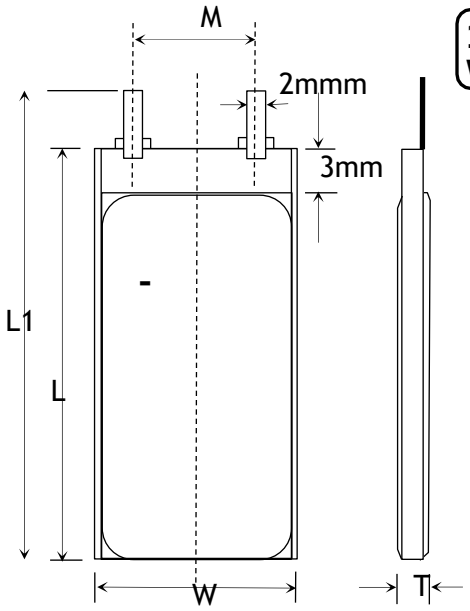

Item	Parameter (mm)
T	3
W	55
M	10
L	86
L_1	88
BL	88 ± 1
CL	100

ENVIRONMENTAL SPECIFICATIONS

Charging Temperature Range	0 - 45°C
Discharging Temperature Range	-20 - 60°C
Storage Period 1 Week	-20 - 45°C
Storage Period 1 Month	-10 - 45°C
Storage Period 6 Months	0 - 35°C

BATTERY PROTECTION

Over Charge	4.275 ± 50mV
Over Discharge	2.5V ± 50mV
Over Current	3A to 5A
Short Circuit	Yes

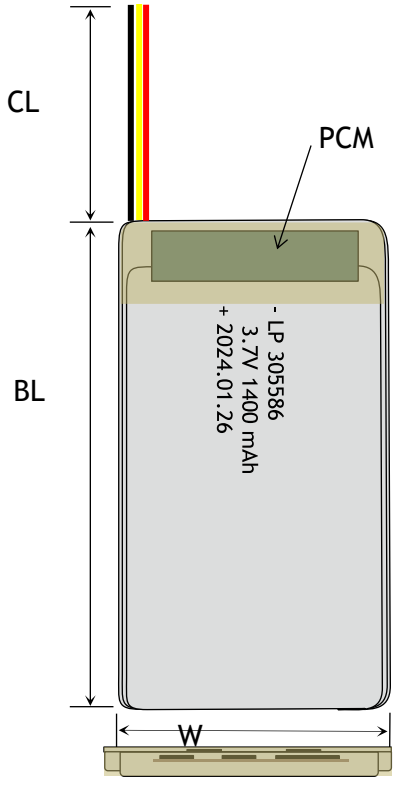

MECHANICAL SPECIFICATIONS

Dimensions	88x 55 x 3 mm(L*W*T)
Weight	Around 23 g
Battery Terminals	WC/ FL *

CERTIFICATION

Certification Approval	PLEASE CONSULT SALES

* WC=With Connector FL=Flying Leads UWP=Blue Wrapped PVC BWP=Black Wrapped PVC BC= Bare Cell

RELATIVE CURVES

Constant Current Charge Characteristics---1.7A

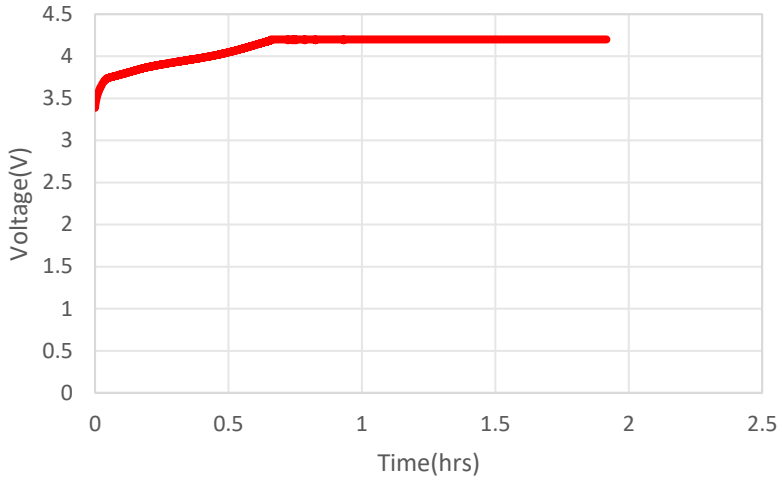

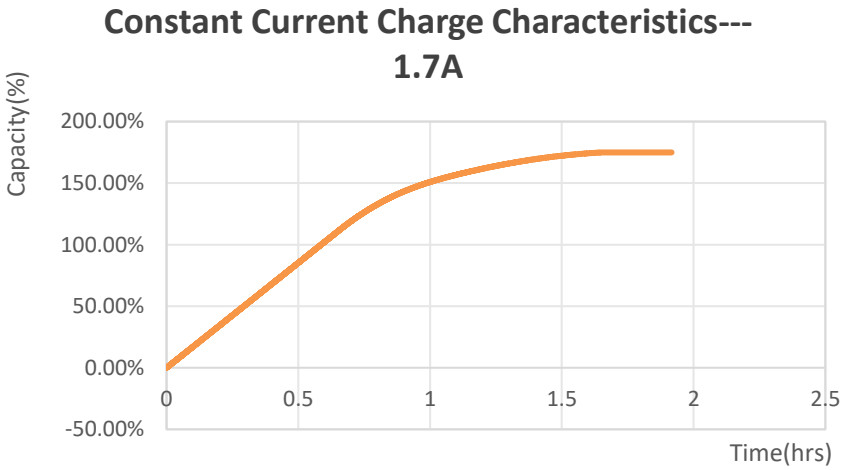

ANNOUNCEMENT

- Never remove the battery from its protective plastic case.
- ALWAYS use the correct battery and charger size and type that is specified for the device.
- Double check that the setting for the lithium polymer charger is correct for the pack being charged – this includes the cell count as well as the current settings.
- Do not vibrate the battery excessively.
- Avoid prolonged use of higher power devices.
- Do not vibrate the battery excessively.
- Avoid prolonged use of the device with a low battery.
- During transportation and storage, ensure effective measures are employed to prevent shortcircuit.
- 3.6V~3.9V range. Always store your LiPo pack in a safe and non flammable container away from flammable objects.
- Only ever use a charger specifically designed to charge Lithium Polymer cells. Failure to do so may a cause fire, which may result in personal injury and/or property damage.
- The battery must be protected against shocks and splashing of materials from outside the model.