3.7V Lithium Polymer Battery Data Sheet

Model: 305576

Please Find More:

https://www.fpbattery.com/3-7v-1300mah-lithium-polymer-battery/

File Number: A/FP5576-10094

File Version: 01

CONTACT

CUSTOMER SERVICE
86.755.3682.7358
sales@fpbattery.com
Hours of Operation:
9:00am-6:00pm CST, Monday to Friday

LEARN MORE ON:
https://www.fpbattery.com/

DNK POWER COMPANY LIMITED

BATTERY SPECIFICATION

Part Number	DNK 305576
Nominal Voltage	3.7 V
Nominal Capacity	1300 mAh
Internal Impedence	<60mΩ
Charge Voltage	4.2V
Recommended Charge Current	0.2 C
Allowed Max Charge Current	0.5 C
Output Voltage Range	4.2 - 2.5 V
Recommended Discharge Current	0.2 C
Max Continuous Discharge Current	1 C
Pulse Discharge Current	3 C (10 mS)
Discharge Cut-off Voltage	2.5± 0.05V
Cycle Life to 80% Health	500 (0.2C, 25°C)

1

ENVIRONMENTAL SPECIFICATIONS

Charging Temperature Range	0 - 45°C
Discharging Temperature Range	-20 - 60°C
Storage Period 1 Week	-20 - 45°C
Storage Period 1 Month	-10 - 45°C
Storage Period 6 Months	0 - 35°C

BATTERY PROTECTION

Over Charge	4.275 ± 50mV
Over Discharge	2.5V ± 50mV
Over Current	3A to 5A
Short Circuit	Yes

MECHANICAL SPECIFICATIONS

Dimensions	78x 55 x 3 mm(L*W*T)
Weight	Around 21 g
Battery Terminals	WC/ FL *

CERTIFICATION

Certification Approval	PLEASE CONSULT SALES

* WC=With Connector FL=Flying Leads UWP=Blue Wrapped PVC BWP=Black Wrapped PVC BC= Bare Cell

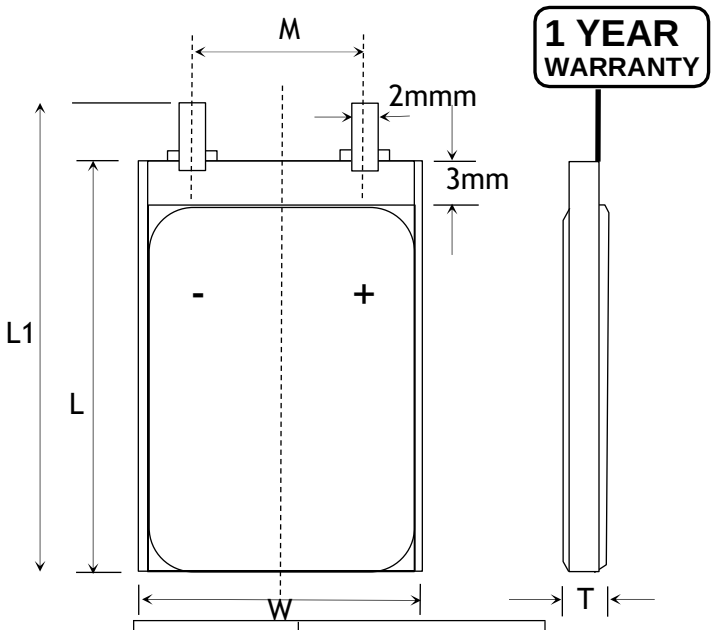

Item	Parameter (mm)
T	3
W	55
M	10
L	76
L_1	78
BL	78 ± 1
CL	100

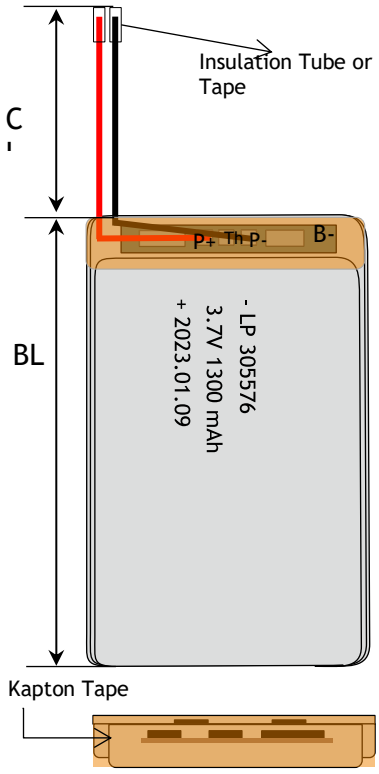

RELATIVE CURVES

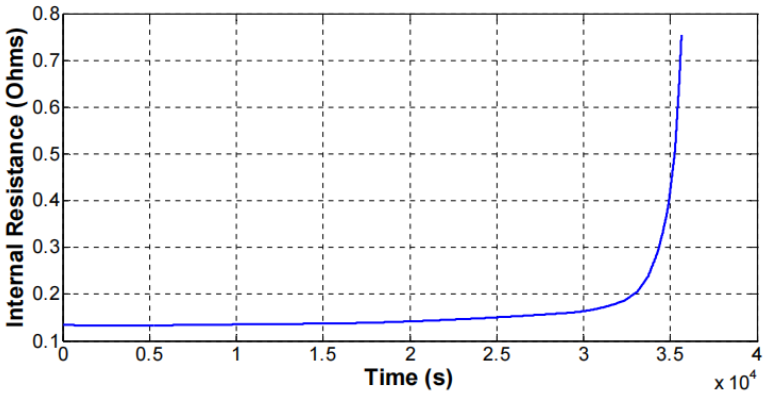

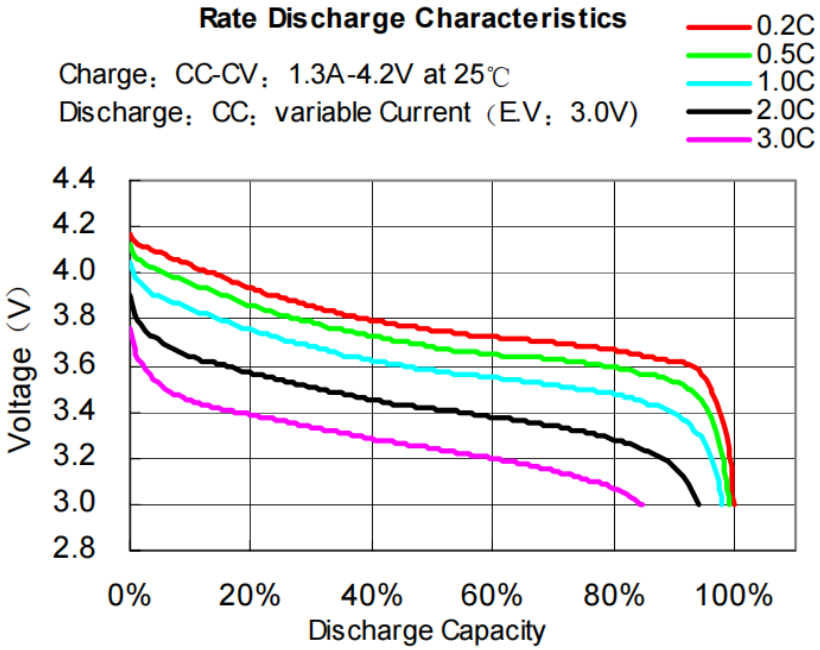

ANNOUNCEMENT

- Always use a proper balance discharger when discharging your batteries
- Be careful of the polarity when connecting and disconnecting batteries.
- Always charge batteries at a rate of 1c (one (times the capacity unless specified by the manufacturer.
- The batteries must be stored within -10°C~45°C range environmental condition.
- For systems with multiple batteries, make sure each battery is of the same type and capacity.
- Never discharge the battery cells below 3.2V.
- Never, under ANY circumstances let the positive and negative battery leads touchThis can lead to cell ballooning, cell damage, fire or an explosion. If you notice your LiPo battery pack is If necessary, put the battery in a non-combustible bucket or container and observe it for 15 minutes . swelling, disconnect the charging device immediately.
- Always follow the manufacturer's safety instructions
- Do not charge dissimilar or un-matched packs in series or parallel with any difference in cell type, cell capacity, manufacturer, age, pack capacity or charge state (+/0.03V per cell). If in any doubt, always charge them separately.
- Only use chargers provided by and/or approved by the manufacturer.
- Ensure that you purchase the right type and size of battery that matches the requirements of your equipment.