3.7V Lithium Polymer Battery Data Sheet

Model: 305560

Please Find More:

https://www.fpbattery.com/3-7v-900mah-lithium-polymer-battery/

File Number: A/FP5560-3986

File Version: 01

CONTACT

CUSTOMER SERVICE
86.755.3682.7358
sales@fpbattery.com
Hours of Operation:
9:00am-6:00pm CST, Monday to Friday

LEARN MORE ON:
https://www.fpbattery.com/

DNK POWER COMPANY LIMITED

BATTERY SPECIFICATION

Part Number	DNK 305560
Nominal Voltage	3.7 V
Nominal Capacity	990 mAh
Internal Impedence	<60mΩ
Charge Voltage	4.2V
Recommended Charge Current	0.2 C
Allowed Max Charge Current	0.5 C
Output Voltage Range	4.2 - 2.5 V
Recommended Discharge Current	0.2 C
Max Continuous Discharge Current	1 C
Pulse Discharge Current	3 C (10 mS)
Discharge Cut-off Voltage	2.5± 0.05V
Cycle Life to 80% Health	500 (0.2C, 25°C)

1

1 YEAR WARRANTY

Inflex and soler

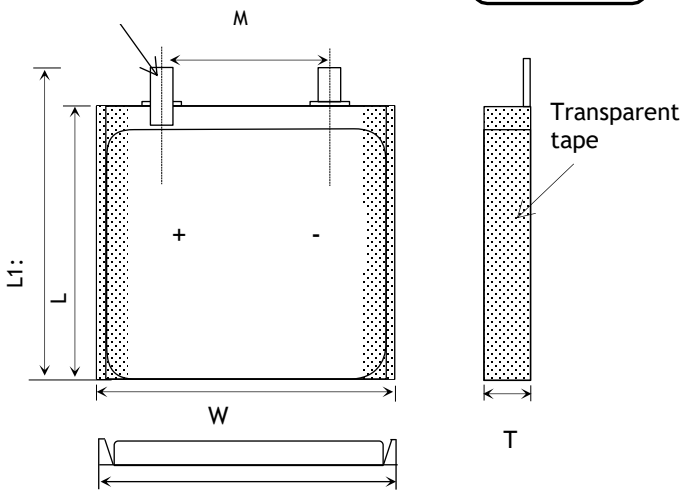

Item	Parameter (mm)
T	3
W	55
M	10
L	60
L_1	62
BL	62 ± 1
CL	100

ENVIRONMENTAL SPECIFICATIONS

Charging Temperature Range	0 - 45°C
Discharging Temperature Range	-20 - 60°C
Storage Period 1 Week	-20 - 45°C
Storage Period 1 Month	-10 - 45°C
Storage Period 6 Months	0 - 35°C

BATTERY PROTECTION

Over Charge	4.275 ± 50mV
Over Discharge	2.5V ± 50mV
Over Current	3A to 5A
Short Circuit	Yes

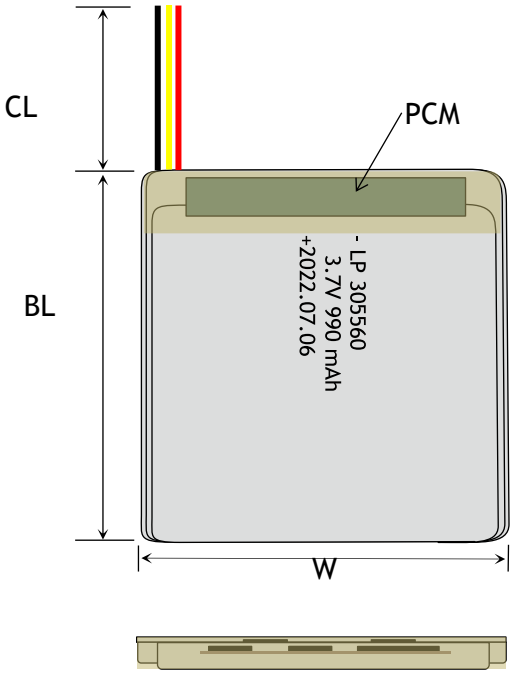

MECHANICAL SPECIFICATIONS

Dimensions	62x 55 x 3 mm(L*W*T)
Weight	Around 16 g
Battery Terminals	WC/ FL *

CERTIFICATION

Certification Approval	PLEASE CONSULT SALES

* aWC=With Connector FL=Flying Leads UWP=Blue Wrapped PVC
BWP=Black Wrapped PVC BC= Bare Cell

BULK PRODUCTION ACTUAL PICTURES



BARE CELL (BC)



FLYING LEADS (FL)



WITH CONNECTOR (WC)



BLUE WRAPPED PVC (UWP)



BLACK WRAPPED PVC (BWP)

3.7V LIPO BATTERY OPTIONS



Special Ingredients to make batteries work from -40 -85 ° C



Discharging Current up to 100C



Popular JST,Molex,Hirose,Anderson available



LED Power Indicator



Power Button



Upgrade to LifePo4 tech and life circle up to 1500

RELATIVE CURVES

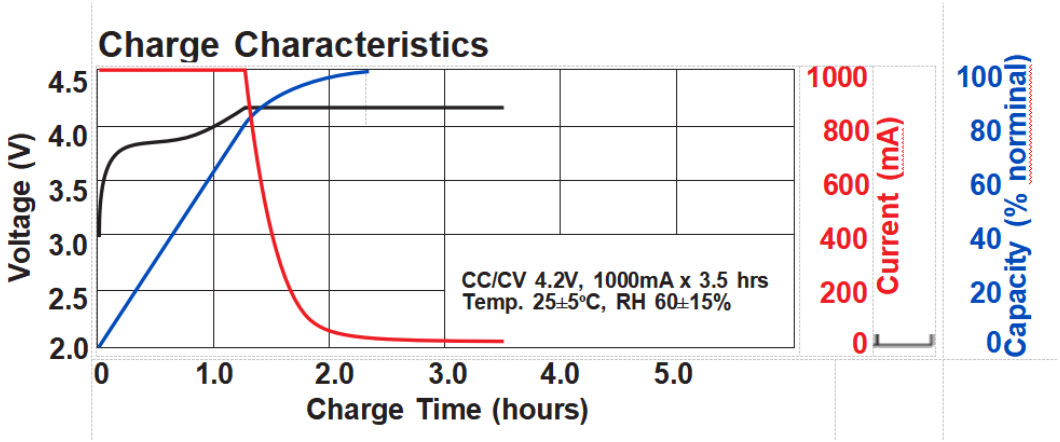

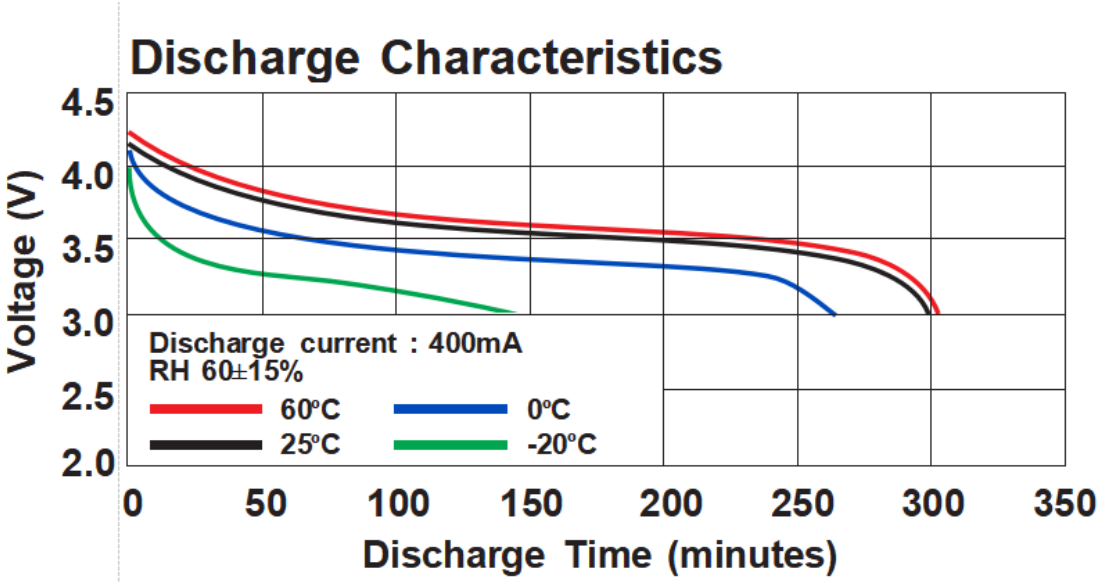

ANNOUNCEMENT

- Avoid prolonged use of the battery until depleted.
- Work on insulated surfaces. Avoid sharp edges and tools.
- Store dust free and dry and protect from moisture
- Never charge a damaged or inflated battery.
- Charge on a non-flammable surface (concrete, ceramic, steel) away from any flammable material
- Clean the battery connectors regularly to maintain good contact performance.
- NEVER alter or disassemble a Lipo battery.
- The batteries must be stored within -10°C~45°C range environmental condition.
- Do not leave cells un-attended when charging. Always remain close to the charging cells to constantly monitor the charging process and react to any potential problems should they occur.
- Only authorized personnel may ship lithium batteries. Contact EHRS if there is a need to ship batteries.
- Do not place the battery on flammable materials near a fire source.