3.7V Lithium Polymer Battery Data Sheet

Model: 3055103

Please Find More:

https://www.fpbattery.com/3-7v-1700mah-lithium-polymer-battery/

File Number: A/FP55103-17746

File Version: 01

CONTACT

CUSTOMER SERVICE
86.755.3682.7358
sales@fpbattery.com
Hours of Operation:
9:00am-6:00pm CST, Monday to Friday

LEARN MORE ON:
https://www.fpbattery.com/

DNK POWER COMPANY LIMITED

BATTERY SPECIFICATION

Part Number	DNK 3055103
Nominal Voltage	3.7 V
Nominal Capacity	1700 mAh
Internal Impedence	<60mΩ
Charge Voltage	4.2V
Recommended Charge Current	0.2 C
Allowed Max Charge Current	0.5 C
Output Voltage Range	4.2 - 2.5 V
Recommended Discharge Current	0.2 C
Max Continuous Discharge Current	1 C
Pulse Discharge Current	3 C (10 mS)
Discharge Cut-off Voltage	2.5± 0.05V
Cycle Life to 80% Health	500 (0.2C, 25°C)

1

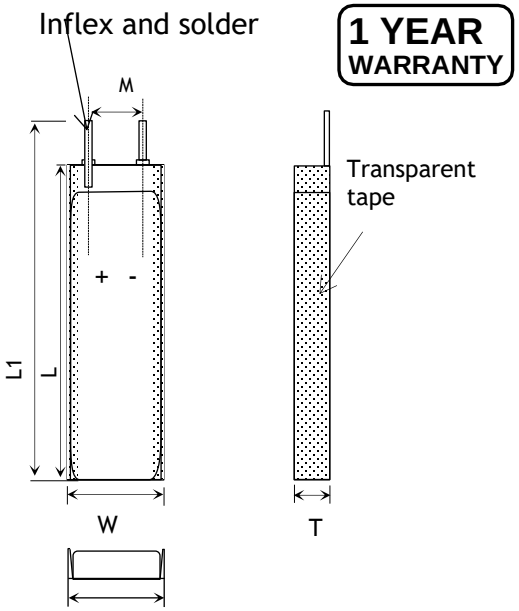

Item	Parameter (mm)
T	3
W	55
M	10
L	103
L_1	105
BL	105 ± 1
CL	100

ENVIRONMENTAL SPECIFICATIONS

Charging Temperature Range	0 - 45°C
Discharging Temperature Range	-20 - 60°C
Storage Period 1 Week	-20 - 45°C
Storage Period 1 Month	-10 - 45°C
Storage Period 6 Months	0 - 35°C

BATTERY PROTECTION

Over Charge	4.275 ± 50mV
Over Discharge	2.5V ± 50mV
Over Current	3A to 5A
Short Circuit	Yes

MECHANICAL SPECIFICATIONS

Dimensions	105x 55 x 3 mm(L*W*T)
Weight	28 g
Battery Terminals	WC/ FL *

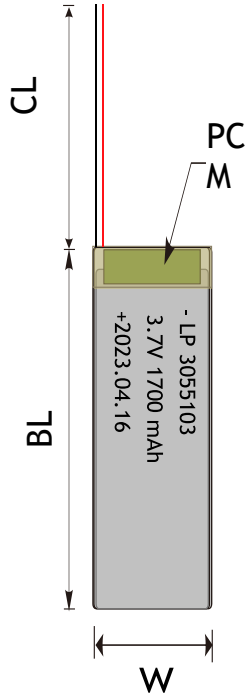

CERTIFICATION

Certification Approval	PLEASE CONSULT SALES

* WC=With Connector FL=Flying Leads UWP=Blue Wrapped PVC BWP=Black Wrapped PVC BC= Bare Cell

RELATIVE CURVES

Discharge Characteriestics Curve in Different Rate@25℃

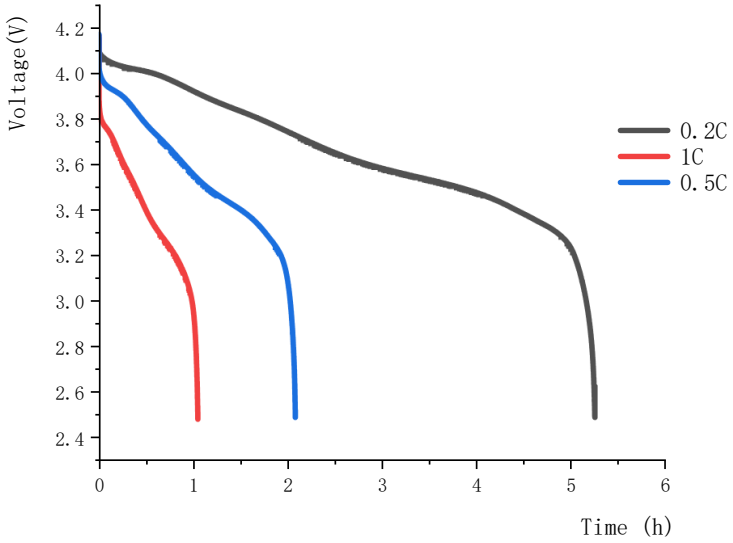

Charge & Discharge Characteriestics in different Rate@25℃

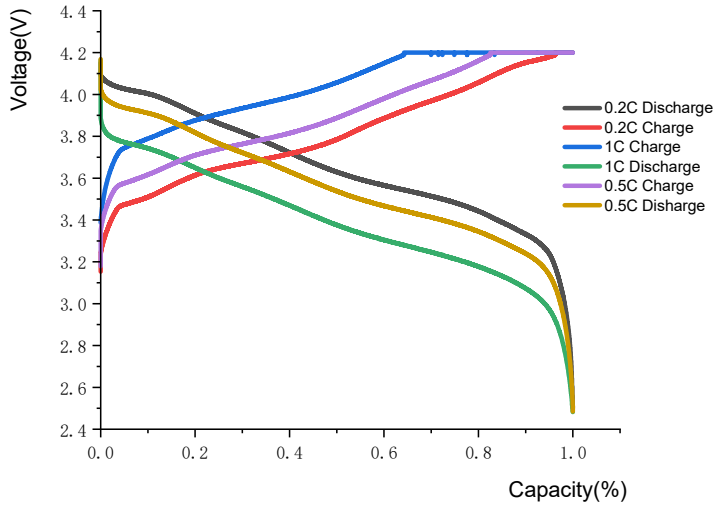

ANNOUNCEMENT

- Periodically check that the battery connectors and cables are intact.
- When using an adapter, select an output voltage and current that meets the needs of the battery.
- To prevent over-discharging, the battery shall be charged periodically to maintain between 3.6V and 3.9V. The High-performance charger are equipped with a device to prevent further discharging exceeding a specified cut-off voltage.
- Do not crush or bend the battery.
- Avoid placing the battery in a damp environment.
- ALWAYS download a copy of the Safety Data Sheet (SDS) for the battery on the manufacturer's website or by contacting the manufacturer. Review and understand the hazards of the battery before storing, charging, or using.
- Do not charge any pack containing one or more damaged or swollen/puffed cell as there is a high risk of a fire. Dispose of them.
- NEVER charge a device under a pillow, on a bed, on a carpet, on a couch, or other combustible material.
- Make sure the battery is fully charged before use.
- Do not charge the battery in a closed container.
- Do not overcharge the battery and observe the charger and battery charge time instructions.