3.7V Lithium Polymer Battery Data Sheet

Model: 305280

Please Find More:

https://www.fpbattery.com/1200mah-lipo-battery/

File Number: A/FP5280-12888

File Version: 01

CONTACT

CUSTOMER SERVICE
86.755.3682.7358
sales@fpbattery.com
Hours of Operation:
9:00am-6:00pm CST, Monday to Friday

LEARN MORE ON:
https://www.fpbattery.com/

DNK POWER COMPANY LIMITED

BATTERY SPECIFICATION

Part Number	DNK 305280
Nominal Voltage	3.7 V
Nominal Capacity	1200 mAh
Internal Impedence	<60mΩ
Charge Voltage	4.2V
Recommended Charge Current	0.2 C
Allowed Max Charge Current	0.5 C
Output Voltage Range	4.2 - 2.5 V
Recommended Discharge Current	0.2 C
Max Continuous Discharge Current	1 C
Pulse Discharge Current	3 C (10 mS)
Discharge Cut-off Voltage	2.5± 0.05V
Cycle Life to 80% Health	500 (0.2C, 25°C)

1

1 YEAR WARRANTY

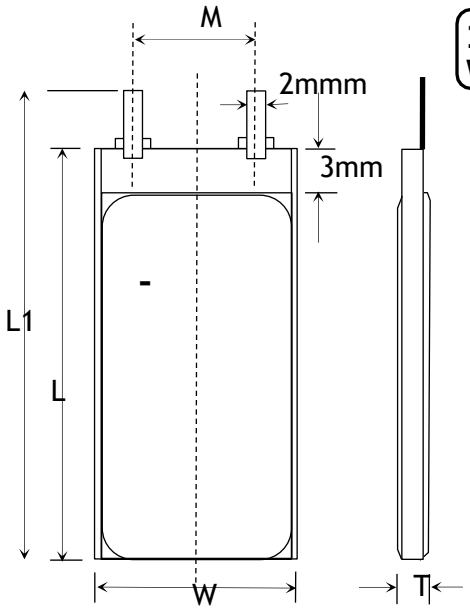

Item	Parameter (mm)
T	3
W	52
M	10
L	80
L_1	82
BL	82 ± 1
CL	100

ENVIRONMENTAL SPECIFICATIONS

Charging Temperature Range	0 - 45°C
Discharging Temperature Range	-20 - 60°C
Storage Period 1 Week	-20 - 45°C
Storage Period 1 Month	-10 - 45°C
Storage Period 6 Months	0 - 35°C

BATTERY PROTECTION

Over Charge	4.275 ± 50mV
Over Discharge	2.5V ± 50mV
Over Current	3A to 5A
Short Circuit	Yes

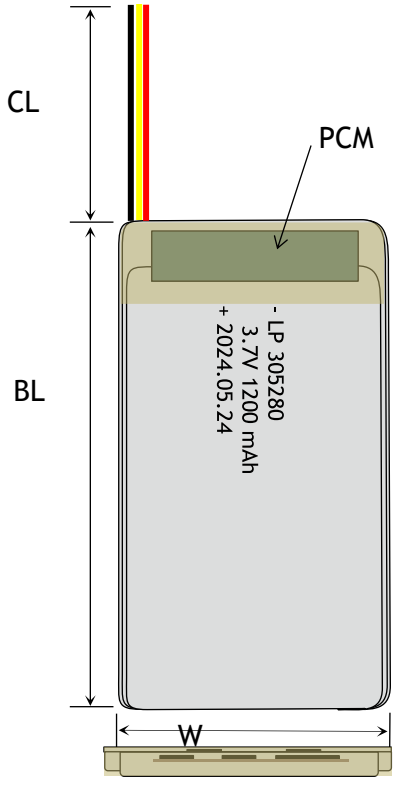

MECHANICAL SPECIFICATIONS

Dimensions	82x 52 x 3 mm(L*W*T)
Weight	Around 20 g
Battery Terminals	WC/ FL *

CERTIFICATION

Certification Approval	PLEASE CONSULT SALES

* WC=With Connector FL=Flying Leads UWP=Blue Wrapped PVC BWP=Black Wrapped PVC BC= Bare Cell

RELATIVE CURVES

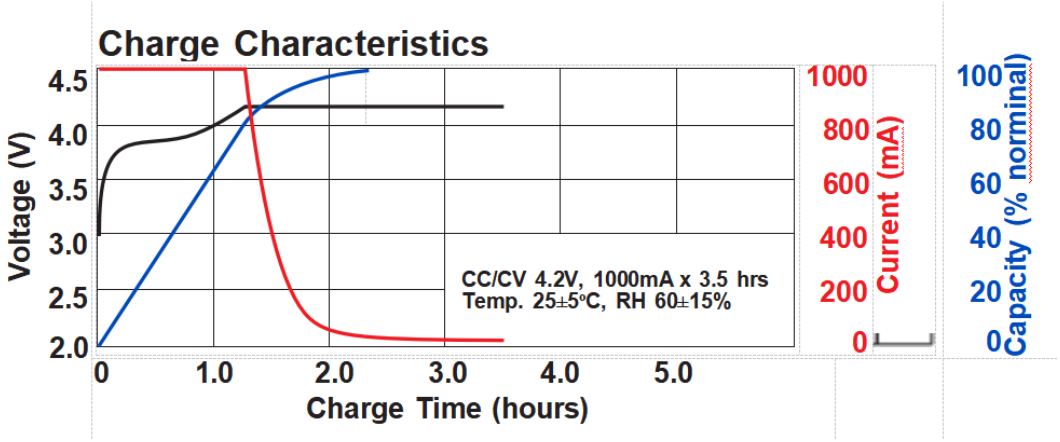

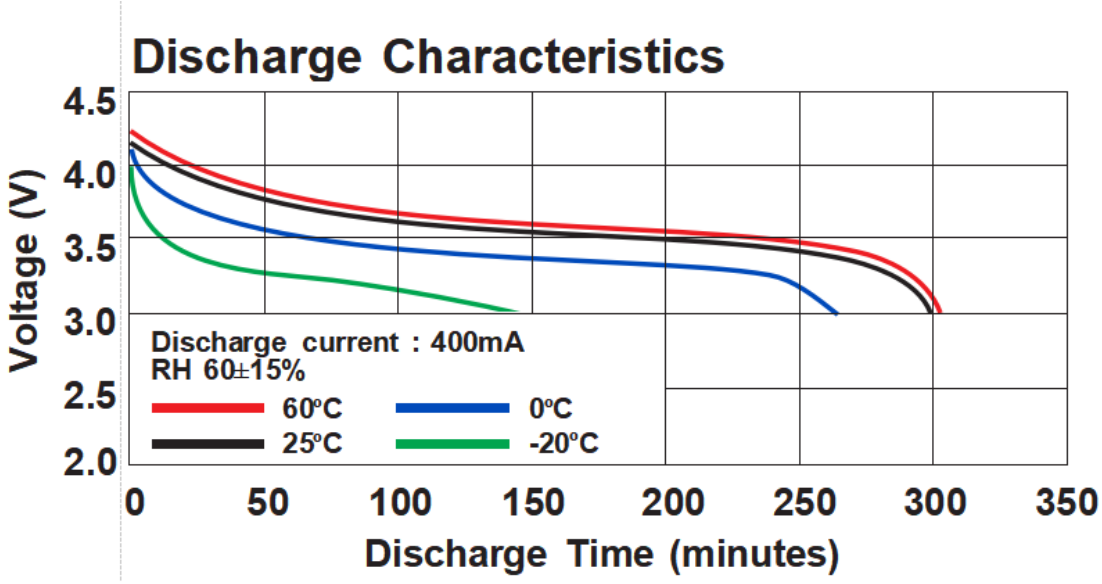

ANNOUNCEMENT

- NEVER extinguish LiPo batteries with water.
- Immediately disconnect the batteries if, during operation or charging, they emit an unusual smell, develop heat, change shape/geometry, or behave abnormally.
- Do not leave unattended when charging
- Always consult the manufacturerGspecific battery manual for proper instructions.
- Only authorized personnel may ship lithium batteries. Contact EHRS if there is a need to ship batteries.
- ALWAYS store batteries away from any materials that can catch fire.
- Store LiPo batteries to be disposed of in a dedicated area of the battery storage cabinet or a dedicated area of the lab away from combustible materials.
- Only ever use a charger specifically designed to charge Lithium Polymer cells. Failure to do so may a cause fire, which may result in personal injury and/or property damage.
- Avoid bending or twisting the battery.
- Only use chargers provided by and/or approved by the manufacturer.
- Do not submit to static electricity risks tAVOID damages to the Protecting Circuit Board.