3.7V Lithium Polymer Battery Data Sheet

Model: 305092

Please Find More:

https://www.fpbattery.com/3-7v-1400mah-lithium-polymer-battery/

File Number: A/FP5092-17321

File Version: 01

CONTACT

CUSTOMER SERVICE
86.755.3682.7358
sales@fpbattery.com
Hours of Operation:
9:00am-6:00pm CST, Monday to Friday

LEARN MORE ON:
https://www.fpbattery.com/

DNK POWER COMPANY LIMITED

BATTERY SPECIFICATION

Part Number	DNK 305092
Nominal Voltage	3.7 V
Nominal Capacity	1400 mAh
Internal Impedence	<60mΩ
Charge Voltage	4.2V
Recommended Charge Current	0.2 C
Allowed Max Charge Current	0.5 C
Output Voltage Range	4.2 - 2.5 V
Recommended Discharge Current	0.2 C
Max Continuous Discharge Current	1 C
Pulse Discharge Current	3 C (10 mS)
Discharge Cut-off Voltage	2.5± 0.05V
Cycle Life to 80% Health	500 (0.2C, 25°C)

1

1 YEAR WARRANTY

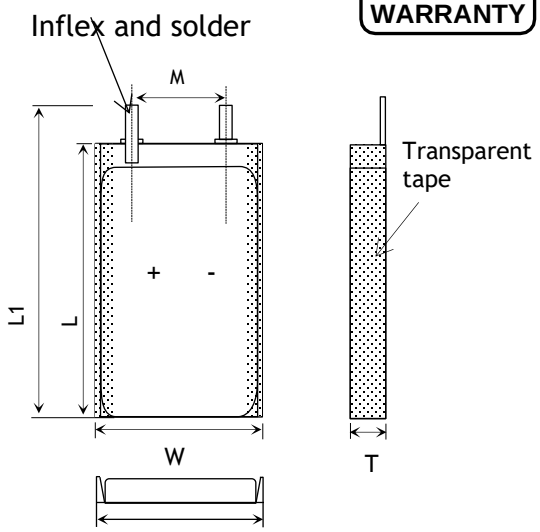

Item	Parameter (mm)
T	3
W	50
M	10
L	92
L_1	94
BL	94 ± 1
CL	100

ENVIRONMENTAL SPECIFICATIONS

Charging Temperature Range	0 - 45°C
Discharging Temperature Range	-20 - 60°C
Storage Period 1 Week	-20 - 45°C
Storage Period 1 Month	-10 - 45°C
Storage Period 6 Months	0 - 35°C

BATTERY PROTECTION

Over Charge	4.275 ± 50mV
Over Discharge	2.5V ± 50mV
Over Current	3A to 5A
Short Circuit	Yes

MECHANICAL SPECIFICATIONS

Dimensions	94x 50 x 3 mm(L*W*T)
Weight	23 g
Battery Terminals	WC/ FL *

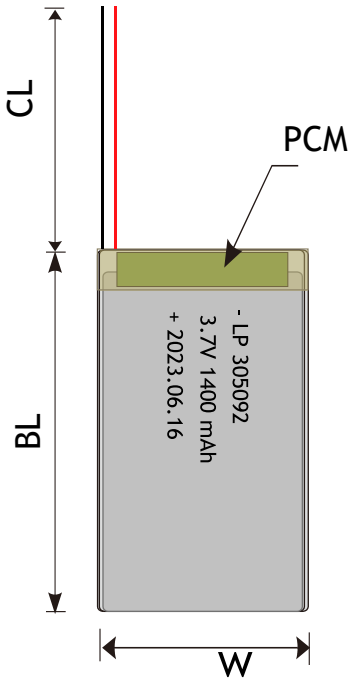

CERTIFICATION

Certification Approval	PLEASE CONSULT SALES

* WC=With Connector FL=Flying Leads UWP=Blue Wrapped PVC BWP=Black Wrapped PVC BC= Bare Cell

BULK PRODUCTION ACTUAL PICTURES



BARE CELL (BC)



FLYING LEADS (FL)



WITH CONNECTOR (WC)



BLUE WRAPPED PVC (UWP)



BLACK WRAPPED PVC (BWP)

3.7V LIPO BATTERY OPTIONS



Special Ingredients to make batteries work from -40 -85 ° C



Discharging Current up to 100C



Popular JST,Molex,Hirose,Anderson available



LED Power Indicator



Power Button



Upgrade to LifePo4 tech and life circle up to 1500

RELATIVE CURVES

Charge & Discharge Characteriestics in different Rate@25℃

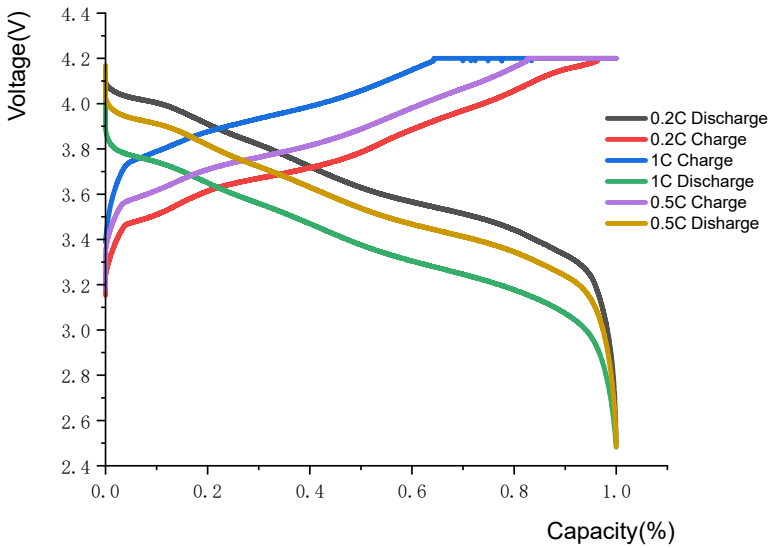

Discharge Characteriestics Curve in Different Rate@25℃

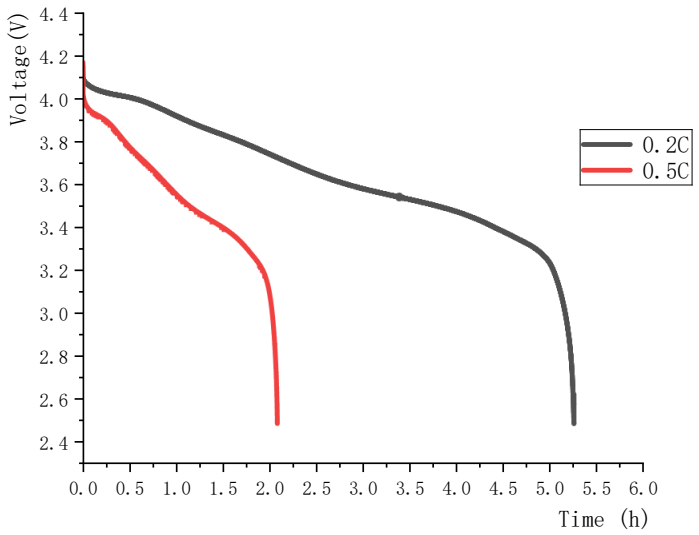

ANNOUNCEMENT

- Monitor storage by means of suitable fire alarm
- Never leave a charging LiPo battery pack unattended. Never store batteries inside of an automobile.
- Only use chargers provided by and/or approved by the manufacturer.
- If the battery becomes hot, smokes, or becomes abnormal, stop using it immediately.
- ALWAYS download a copy of the Safety Data Sheet (SDS) for the battery on the manufacturer's website or by contacting the manufacturer. Review and understand the hazards of the battery before storing, charging, or using.
- The discharge temperature range is between 32°F (0°C) and 113°F (45°C).
- Do not inhale the smoke/fumes of a LiPo battery that is on fire. The smoke is toxic. Leave the area and call 911.
- Avoid bending or twisting the battery.
- ALWAYS use the charging cord supplied with the device (or only use a replacement charging cord that is specified by the device manufacturer to bean approved alternative).
- Do not inhale the gasses of a damaged battery or ingest the contents. If you do accidentally swallow the contents of LiPo cells seek medical attention immediately.
- Discharge Lipo Battery at Environmental temperature : -20°C~60°C.