3.7V Lithium Polymer Battery Data Sheet

Model: 305068

Please Find More:

https://www.fpbattery.com/3-7v-1000mah-lithium-polymer-battery/

File Number: A/FP5068-9735

File Version: 01

CONTACT

CUSTOMER SERVICE
86.755.3682.7358
sales@fpbattery.com
Hours of Operation:
9:00am-6:00pm CST, Monday to Friday

LEARN MORE ON:
https://www.fpbattery.com/

DNK POWER COMPANY LIMITED

BATTERY SPECIFICATION

Part Number	DNK 305068
Nominal Voltage	3.7 V
Nominal Capacity	1020 mAh
Internal Impedence	<60mΩ
Charge Voltage	4.2V
Recommended Charge Current	0.2 C
Allowed Max Charge Current	0.5 C
Output Voltage Range	4.2 - 2.5 V
Recommended Discharge Current	0.2 C
Max Continuous Discharge Current	1 C
Pulse Discharge Current	3 C (10 mS)
Discharge Cut-off Voltage	2.5± 0.05V
Cycle Life to 80% Health	500 (0.2C, 25°C)

1

ENVIRONMENTAL SPECIFICATIONS

Charging Temperature Range	0 - 45°C
Discharging Temperature Range	-20 - 60°C
Storage Period 1 Week	-20 - 45°C
Storage Period 1 Month	-10 - 45°C
Storage Period 6 Months	0 - 35°C

BATTERY PROTECTION

Over Charge	4.275 ± 50mV
Over Discharge	2.5V ± 50mV
Over Current	3A to 5A
Short Circuit	Yes

MECHANICAL SPECIFICATIONS

Dimensions	70x 50 x 3 mm(L*W*T)
Weight	Around 17 g
Battery Terminals	WC/ FL *

CERTIFICATION

Certification Approval	PLEASE CONSULT SALES

* WC=With Connector FL=Flying Leads UWP=Blue Wrapped PVC BWP=Black Wrapped PVC BC= Bare Cell

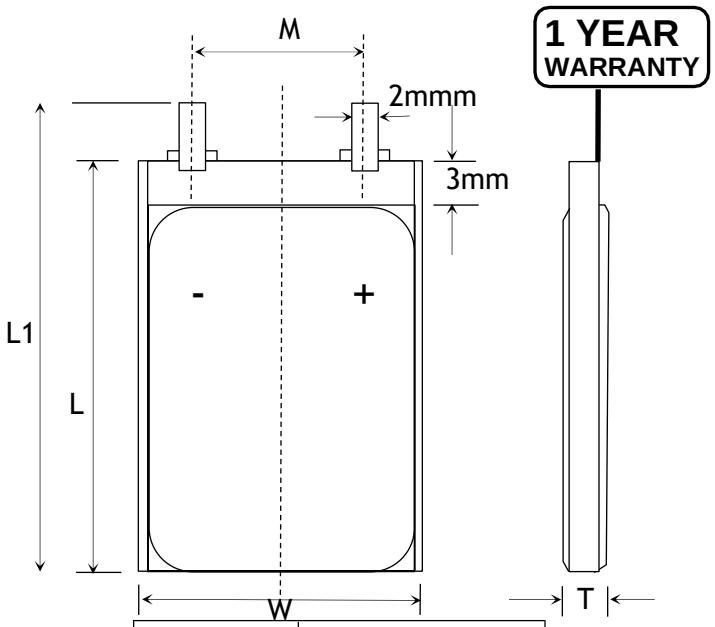

Item	Parameter (mm)
T	3
W	50
M	10
L	68
L_1	70
BL	70 ± 1
CL	100

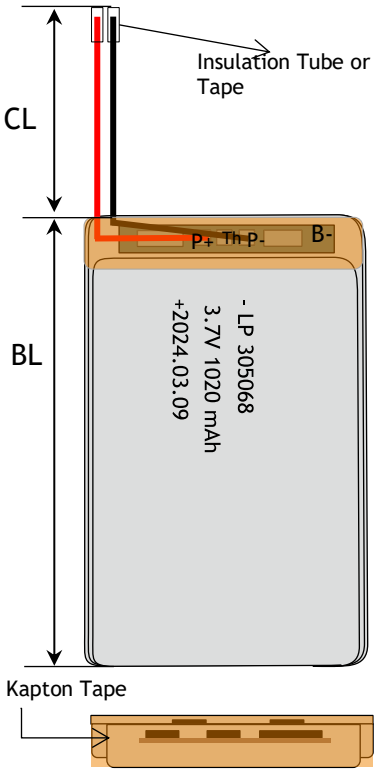

BULK PRODUCTION ACTUAL PICTURES



BARE CELL (BC)



FLYING LEADS (FL)



WITH CONNECTOR (WC)



BLUE WRAPPED PVC (UWP)



BLACK WRAPPED PVC (BWP)

3.7V LIPO BATTERY OPTIONS

Special Ingredients to make batteries work from -40 -85 ° C

Discharging Current up to 100C

Popular JST,Molex,Hirose,Anderson available





LED Power Indicator



Power Button

RELATIVE CURVES

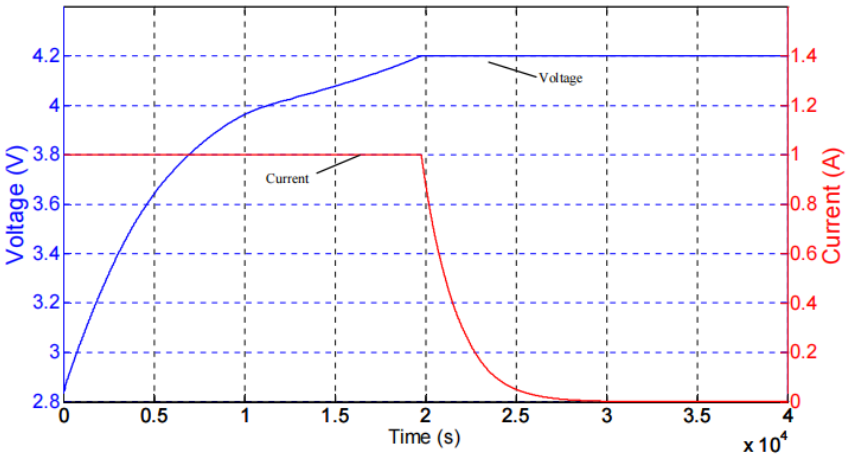

Discharge Temperature Characteristics

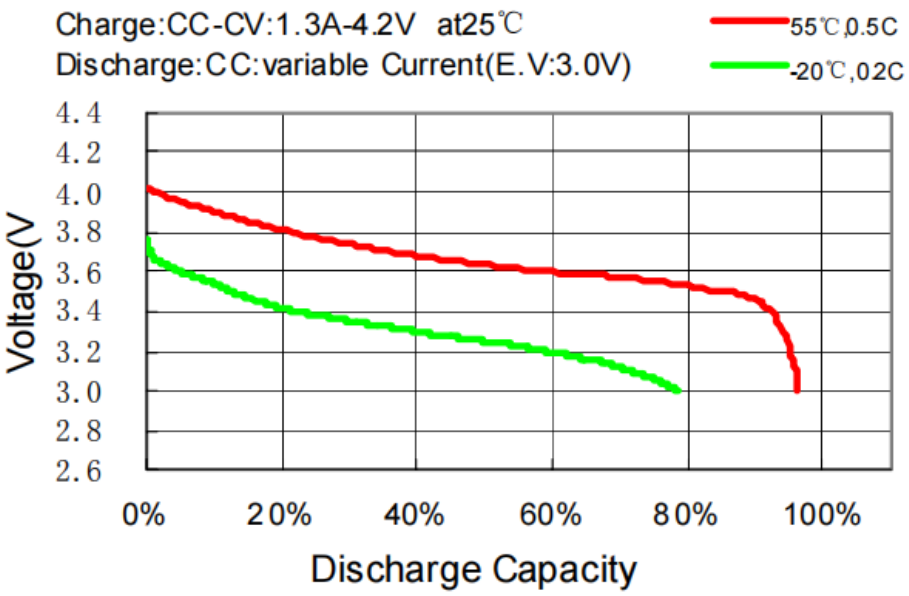

ANNOUNCEMENT

- Never charge a battery that is still warm after usage, and never use a battery that is still warm from charging.
- Avoid short-circuiting the battery. Though short-circuiting for short time will not damage the battery, doing so for a long time will damage the battery and may overheat the battery causing burns, fire or explosion.
- Do not place LiPo batteries in a fire.
- Batteries should not be carried in pockets as coins, keys and similar metal items can cause shorting leading to overheating, burns or ignition.
- Do not store LiPo batteries in extreme temperatures below 0C or above 50C.
- Avoid prolonged use of the battery until depleted.
- Never use a charger that is NOT specifically designed to charge Lithium Polymer cells.
- Never store or charge the battery inside your car or in extreme temperatures. Extreme temperatures might ignite the battery and cause fire. 7) Store the battery in a location inaccessible to children. Be sure that children do not remove the battery from the charger or model.
- Do not use unsuitable battery cover materials.
- Do not disassemble and damage the battery.
- LiPo batteries have very specific charging requirements. Some chargers, such as those used for toys or cellphones, are made to charge a specific cell count and are not configurable for other cell counts. The LiPo charger used must be able to handle the cell count of the battery you arecharging.