3.7V Lithium Polymer Battery Data Sheet

Model: 305066

Please Find More:

https://www.fpbattery.com/3-7v-900mah-lithium-polymer-battery/

File Number: A/FP5066-8884

File Version: 01

CONTACT

CUSTOMER SERVICE
86.755.3682.7358
sales@fpbattery.com
Hours of Operation:
9:00am-6:00pm CST, Monday to Friday

LEARN MORE ON:
https://www.fpbattery.com/

DNK POWER COMPANY LIMITED

BATTERY SPECIFICATION

Part Number	DNK 305066
Nominal Voltage	3.7 V
Nominal Capacity	990 mAh
Internal Impedence	<60mΩ
Charge Voltage	4.2V
Recommended Charge Current	0.2 C
Allowed Max Charge Current	0.5 C
Output Voltage Range	4.2 - 2.5 V
Recommended Discharge Current	0.2 C
Max Continuous Discharge Current	1 C
Pulse Discharge Current	3 C (10 mS)
Discharge Cut-off Voltage	2.5± 0.05V
Cycle Life to 80% Health	500 (0.2C, 25°C)

1

ENVIRONMENTAL SPECIFICATIONS

Charging Temperature Range	0 - 45°C
Discharging Temperature Range	-20 - 60°C
Storage Period 1 Week	-20 - 45°C
Storage Period 1 Month	-10 - 45°C
Storage Period 6 Months	0 - 35°C

BATTERY PROTECTION

Over Charge	4.275 ± 50mV
Over Discharge	2.5V ± 50mV
Over Current	3A to 5A
Short Circuit	Yes

MECHANICAL SPECIFICATIONS

Dimensions	68x 50 x 3 mm(L*W*T)
Weight	Around 16 g
Battery Terminals	WC/ FL *

CERTIFICATION

Certification Approval	PLEASE CONSULT SALES

* WC=With Connector FL=Flying Leads UWP=Blue Wrapped PVC BWP=Black Wrapped PVC BC= Bare Cell

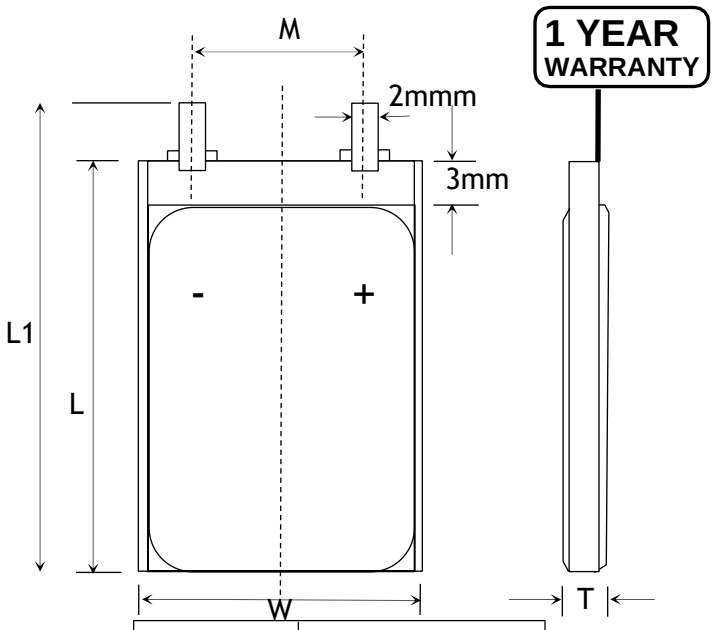

Item	Parameter (mm)
T	3
W	50
M	10
L	66
L_1	68
BL	68 ± 1
CL	100

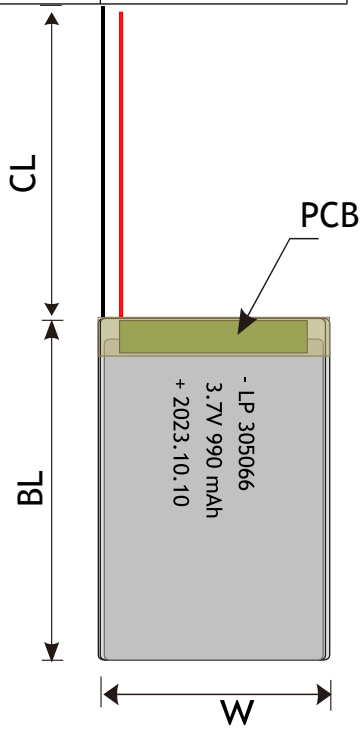

RELATIVE CURVES

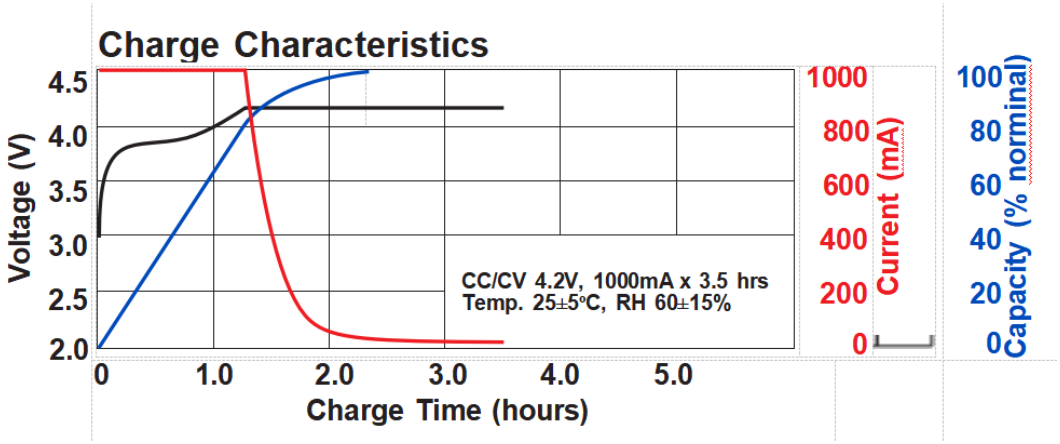

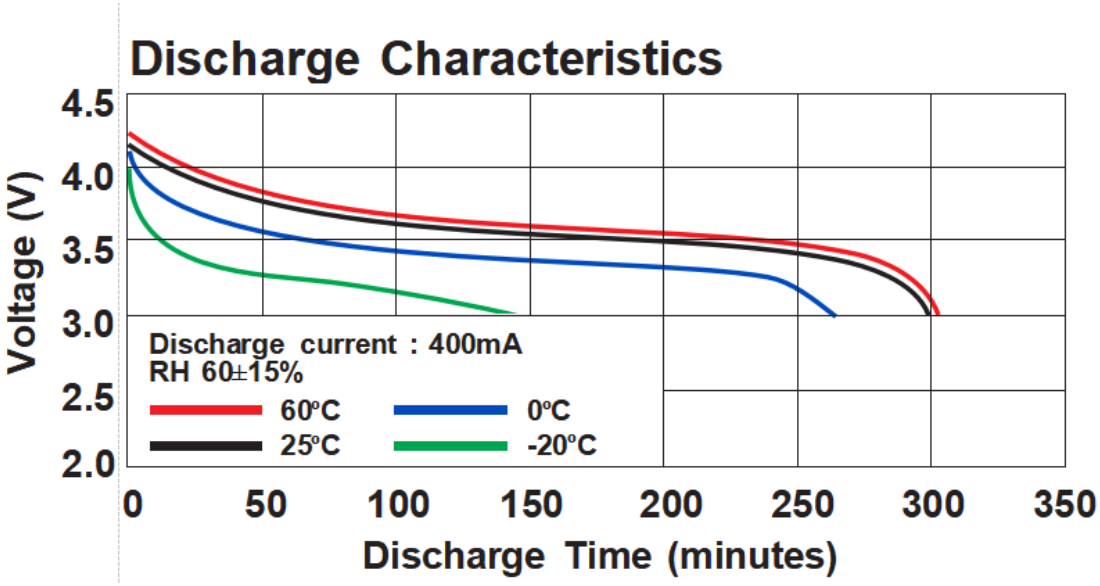

ANNOUNCEMENT

- If you have dropped or damageda LiPo battery in anyway, do not attempt to charge it.
- If charging indoors, only charge with a smoke detector above where you are charging.
- Discharge Lipo Battery at Environmental temperature : -20˚C~60˚C.
- Use a reliable power adapter to avoid unstable current output.
- A 5s4p battery pack means that the pack contains 5 cells in a series circuit and 4 cells in a parallel circuit. Since each cell is 3.7v (nominal) a 5s LiPo battery has a nominal voltage of 18.5V, a fully charged voltage of 21.0V and a maximum discharged voltage of 15.0V before damage occurs.
- Maintain the minimum quantity of batteries possible.
- During transportation and storage, ensure effective measures are employed to prevent shortcircuit.
- Store it in a fire-proof container in a cool dry place.
- It is essential to observe the polarity. Reverse polarity (POSITIVE and NEGATIVE) will damage the cells, cause the battery to swell and can damage your charger.
- Before starting work,make sure your Li-po batteries, chargers, and associated equipment are tested in accordance with an appropriate test standard (e.g., UL 2054), certified by a Nationally Recognized Testing Laboratory (NRTL), and rated for their intended uses.
- Always balance charge batteries using the charger’s balance charging option. Otherwise, an unbalanced cell may become over charged. This will reduce the life of the battery, and possibly cause a fire which could result in personal injury and property damage.