3.7V Lithium Polymer Battery Data Sheet

Model: 305053

Please Find More:

https://www.fpbattery.com/3-7v-750mah-lithium-polymer-battery/

File Number: A/FP5053-3280

File Version: 01

CONTACT

CUSTOMER SERVICE
86.755.3682.7358
sales@fpbattery.com
Hours of Operation:
9:00am-6:00pm CST, Monday to Friday

LEARN MORE ON:
https://www.fpbattery.com/

DNK POWER COMPANY LIMITED

BATTERY SPECIFICATION

Part Number	DNK 305053
Nominal Voltage	3.7 V
Nominal Capacity	795 mAh
Internal Impedence	<60mΩ
Charge Voltage	4.2V
Recommended Charge Current	0.2 C
Allowed Max Charge Current	0.5 C
Output Voltage Range	4.2 - 2.5 V
Recommended Discharge Current	0.2 C
Max Continuous Discharge Current	1 C
Pulse Discharge Current	3 C (10 mS)
Discharge Cut-off Voltage	2.5± 0.05V
Cycle Life to 80% Health	500 (0.2C, 25°C)

1

1 YEAR WARRANTY

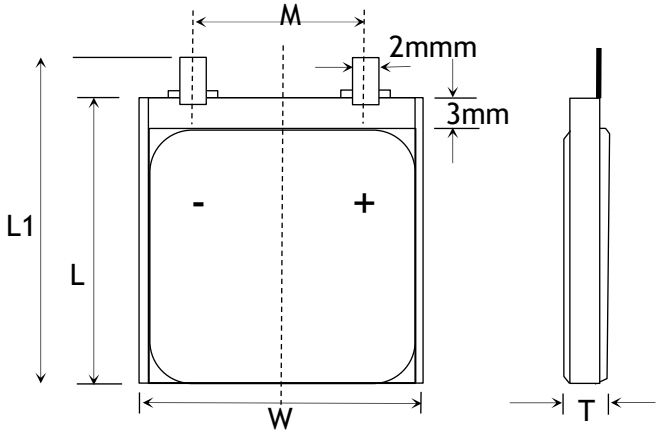

Item	Parameter (mm)
T	3
W	50
M	10
L	53
L_1	55
BL	55 ± 1
CL	100

ENVIRONMENTAL SPECIFICATIONS

Charging Temperature Range	0 - 45°C
Discharging Temperature Range	-20 - 60°C
Storage Period 1 Week	-20 - 45°C
Storage Period 1 Month	-10 - 45°C
Storage Period 6 Months	0 - 35°C

BATTERY PROTECTION

Over Charge	4.275 ± 50mV
Over Discharge	2.5V ± 50mV
Over Current	3A to 5A
Short Circuit	Yes

MECHANICAL SPECIFICATIONS

Dimensions	55x 50 x 3 mm(L*W*T)
Weight	Around 13 g
Battery Terminals	WC/ FL *

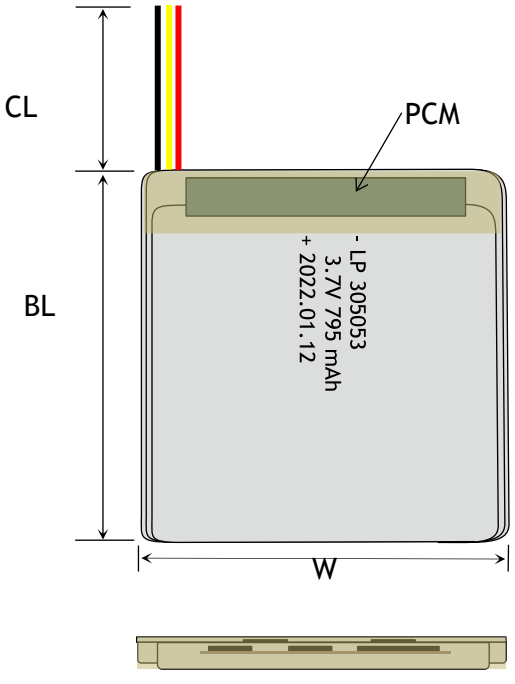

CERTIFICATION

Certification Approval	PLEASE CONSULT SALES

* WC=With Connector FL=Flying Leads UWP=Blue Wrapped PVC
BWP=Black Wrapped PVC BC= Bare Cell

BULK PRODUCTION ACTUAL PICTURES



BARE CELL (BC)



FLYING LEADS (FL)



WITH CONNECTOR (WC)



BLUE WRAPPED PVC (UWP)



BLACK WRAPPED PVC (BWP)

3.7V LIPO BATTERY OPTIONS



Special Ingredients to make batteries work from -40 -85 ° C



Discharging Current up to 100C



Popular JST,Molex,Hirose,Anderson available



LED Power Indicator



Power Button



Upgrade to LifePo4 tech and life circle up to 1500

RELATIVE CURVES

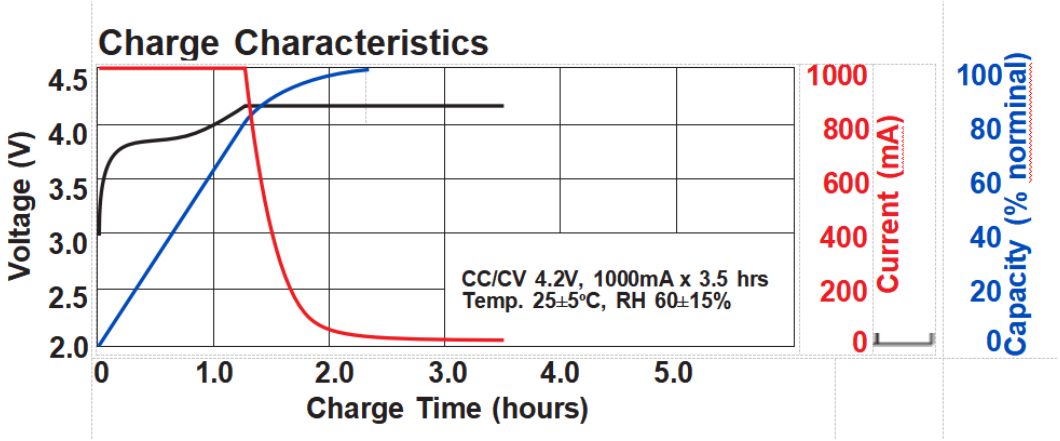

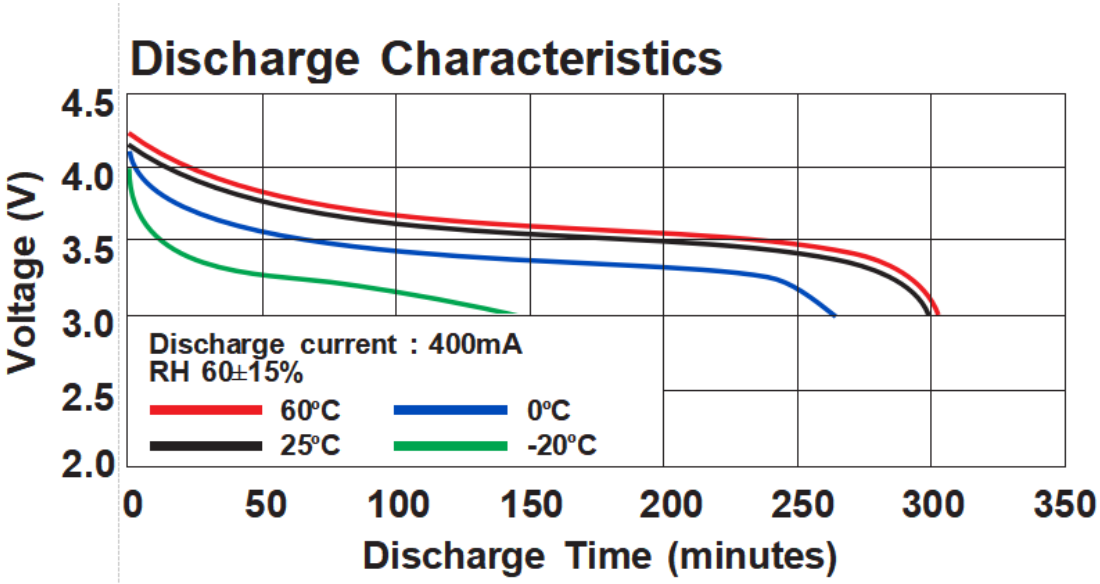

ANNOUNCEMENT

- Use only a charger designed for charging LiPo batteries. Never use any other type of charger.
- Do not leave unattended when charging
- Do not allow children to touch the battery, especially untrained children.
- ALWAYS close the door to the room or space.
- Never incinerate nor dispose of the cells in a fire. These may cause firing of the cells, which is very dangerous and is prohibited.
- Avoid storing the battery in a hot environment.
- ALWAYS identify and separate one-time-use batteries from rechargeable batteries.
- The battery should be transported with 10-50% charged states.
- Immediately disconnect the batteries if, during operation or charging, they emit an unusual smell, develop heat, change shape/geometry, or behave abnormally.
- For systems with multiple batteries, make sure each battery is of the same type and capacity.
- Stop using or charging the battery immediately if the battery becomes or appears damaged, gives off an odor, becomes discolored or deformed, starts to balloon or swell, leaks, exceeds a temperature of 160°F (71°C), or if any other abnormality is detected. Disconnect the battery and observe it in a safe area outside of any building or vehicle and away from any combustible materials. These abnormalities may cause the battery to leak, and the reaction with air may cause the chemical materials inside to ignite. Because delayed chemical reactions may occur (a battery can still ignite even after

10 minutes), you should continue observing the battery for at least 15 minutes as a safety precaution.