3.7V Lithium Polymer Battery Data Sheet

Model: 304854

Please Find More:

https://www.fpbattery.com/3-7v-750mah-lithium-polymer-battery/

File Number: A/FP4854-4717

File Version: 01

CONTACT

CUSTOMER SERVICE
86.755.3682.7358
sales@fpbattery.com
Hours of Operation:
9:00am-6:00pm CST, Monday to Friday

LEARN MORE ON:
https://www.fpbattery.com/

DNK POWER COMPANY LIMITED

BATTERY SPECIFICATION

Part Number	DNK 304854
Nominal Voltage	3.7 V
Nominal Capacity	780 mAh
Internal Impedence	<60mΩ
Charge Voltage	4.2V
Recommended Charge Current	0.2 C
Allowed Max Charge Current	0.5 C
Output Voltage Range	4.2 - 2.5 V
Recommended Discharge Current	0.2 C
Max Continuous Discharge Current	1 C
Pulse Discharge Current	3 C (10 mS)
Discharge Cut-off Voltage	2.5± 0.05V
Cycle Life to 80% Health	500 (0.2C, 25°C)

1

1 YEAR WARRANTY

Inflex and soler

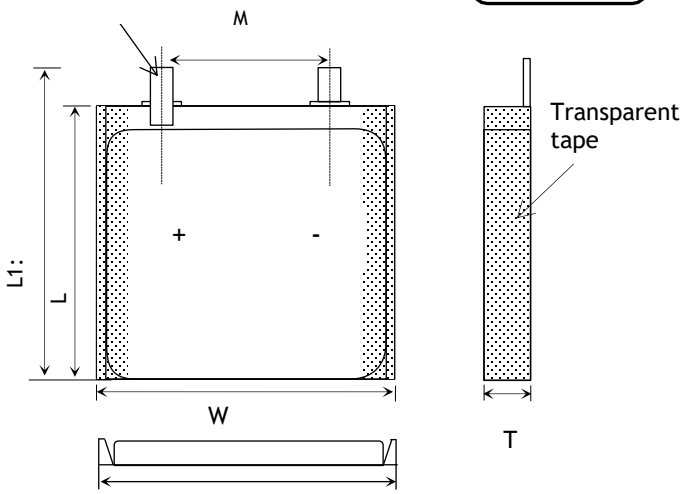

Item	Parameter (mm)
T	3
W	48
M	10
L	54
L_1	56
BL	56 ± 1
CL	100

ENVIRONMENTAL SPECIFICATIONS

Charging Temperature Range	0 - 45°C
Discharging Temperature Range	-20 - 60°C
Storage Period 1 Week	-20 - 45°C
Storage Period 1 Month	-10 - 45°C
Storage Period 6 Months	0 - 35°C

BATTERY PROTECTION

Over Charge	4.275 ± 50mV
Over Discharge	2.5V ± 50mV
Over Current	3A to 5A
Short Circuit	Yes

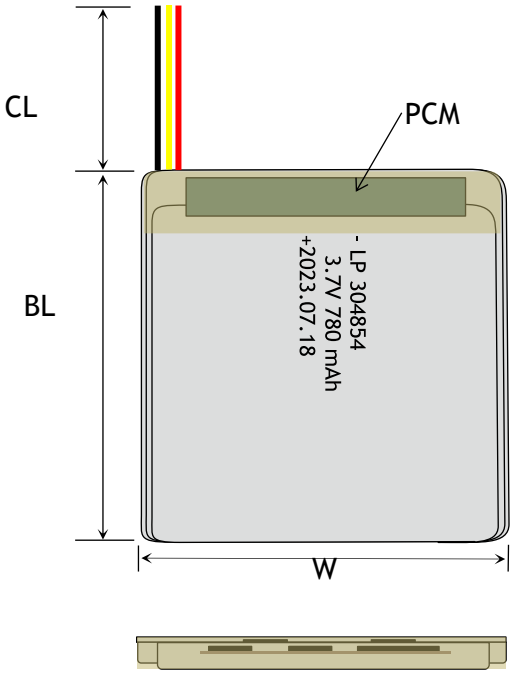

MECHANICAL SPECIFICATIONS

Dimensions	56x 48 x 3 mm(L*W*T)
Weight	Around 13 g
Battery Terminals	WC/ FL *

CERTIFICATION

Certification Approval	PLEASE CONSULT SALES

* aWC=With Connector FL=Flying Leads UWP=Blue Wrapped PVC
BWP=Black Wrapped PVC BC= Bare Cell

BULK PRODUCTION ACTUAL PICTURES



BARE CELL (BC)



FLYING LEADS (FL)



WITH CONNECTOR (WC)



BLUE WRAPPED PVC (UWP)



BLACK WRAPPED PVC (BWP)

3.7V LIPO BATTERY OPTIONS



Special Ingredients to make batteries work from -40 -85 ° C



Discharging Current up to 100C



Popular JST,Molex,Hirose,Anderson available



LED Power Indicator



Power Button



Upgrade to LifePo4 tech and life circle up to 1500

RELATIVE CURVES

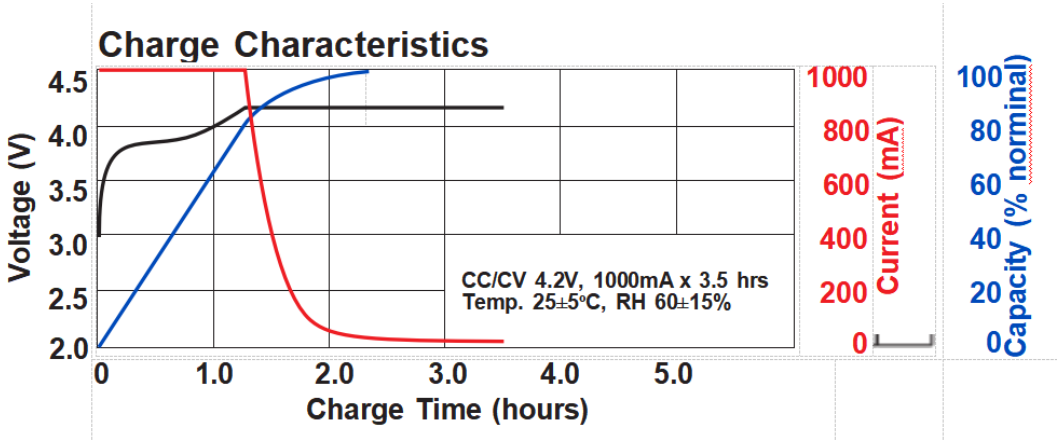

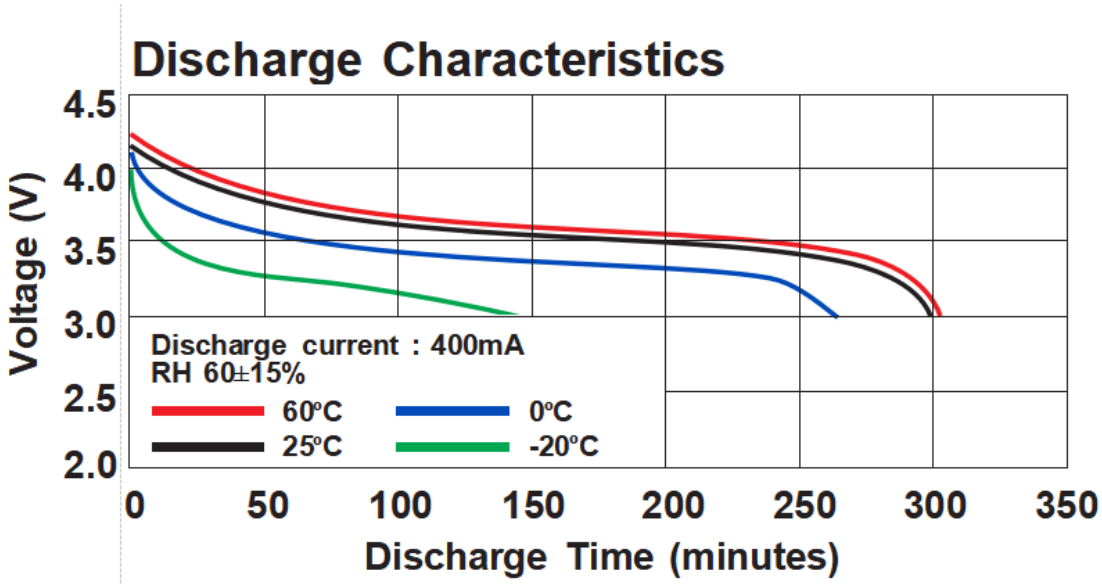

ANNOUNCEMENT

- If you have dropped or damageda LiPo battery in anyway, do not attempt to charge it.
- Charge on non-conductive, non-combustible surfaces.
- Do not use the battery during charging to avoid overheating and safety accidents.
- Ensure that all cells in a battery maintain the same voltage across all cells at all times.
- Charge at correct rate and proper voltage for either use or storage.
- Do not use a damaged charger that could cause the battery to overcharge or over discharge.
- If any of the individual cells become warm/hot compared to the other cells, disconnect it immediately and either cover it with a fire blanket, or put it in a non-conductive container and place it outside away from all flammable objects for at least 30 minutes as chemical reactions can take this long before a fire starts.
- Remove Li-Ion powered devices and batteries from the charger once they are fully charged.
- ALWAYS evacuate the building to your unit's designated outside meeting location.
- Store LiPo batteries to be disposed of in a dedicated area of the battery storage cabinet or a dedicated area of the lab away from combustible materials.
- Always inspect batteries for any signs of damage before use, check for physical damage such as cracks/bulges/indentations . Any battery that has been damaged, dented or pierced should be taken out of service immediately, segregated from other batteries and stored as set out below while awaiting safe disposal. Similarly, damaged goods containing batteries should also be segregated from other material and stored safely to await safe disposal.