3.7V Lithium Polymer Battery Data Sheet

Model: 304668

Please Find More:

https://www.fpbattery.com/3-7v-900mah-lithium-polymer-battery/

File Number: A/FP4668-11789

File Version: 01

CONTACT

CUSTOMER SERVICE
86.755.3682.7358
sales@fpbattery.com
Hours of Operation:
9:00am-6:00pm CST, Monday to Friday

LEARN MORE ON:
https://www.fpbattery.com/

DNK POWER COMPANY LIMITED

BATTERY SPECIFICATION

Part Number	DNK 304668
Nominal Voltage	3.7 V
Nominal Capacity	940 mAh
Internal Impedence	<60mΩ
Charge Voltage	4.2V
Recommended Charge Current	0.2 C
Allowed Max Charge Current	0.5 C
Output Voltage Range	4.2 - 2.5 V
Recommended Discharge Current	0.2 C
Max Continuous Discharge Current	1 C
Pulse Discharge Current	3 C (10 mS)
Discharge Cut-off Voltage	2.5± 0.05V
Cycle Life to 80% Health	500 (0.2C, 25°C)

1 YEAR WARRANTY

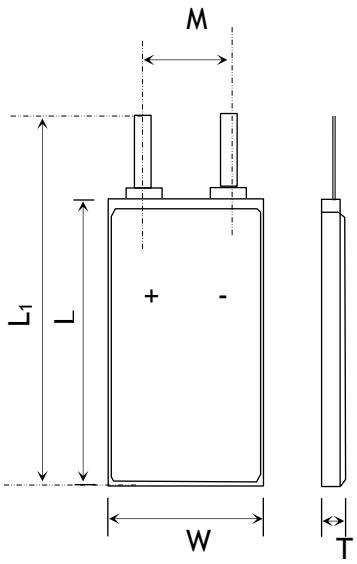

Item	Parameter (mm)
T	3
W	46
M	10
L	68
L_1	70
BL	70 ± 1
CL	100

ENVIRONMENTAL SPECIFICATIONS

Charging Temperature Range	0 - 45°C
Discharging Temperature Range	-20 - 60°C
Storage Period 1 Week	-20 - 45°C
Storage Period 1 Month	-10 - 45°C
Storage Period 6 Months	0 - 35°C

BATTERY PROTECTION

Over Charge	4.275 ± 50mV
Over Discharge	2.5V ± 50mV
Over Current	3A to 5A
Short Circuit	Yes

MECHANICAL SPECIFICATIONS

Dimensions	70x 46 x 3 mm(L*W*T)
Weight	Around 15 g
Battery Terminals	WC/ FL *

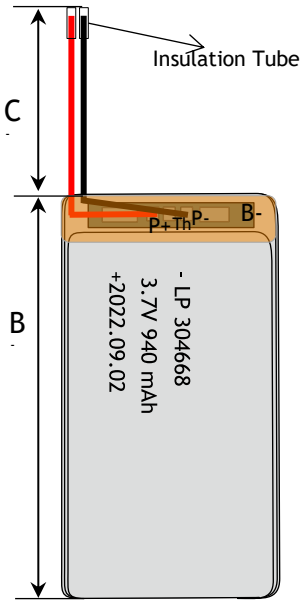

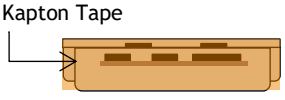

CERTIFICATION

Certification Approval	PLEASE CONSULT SALES

* WC=With Connector FL=Flying Leads UWP=Blue Wrapped PVC BWP=Black Wrapped PVC BC= Bare Cell

RELATIVE CURVES

Charge Characteristics

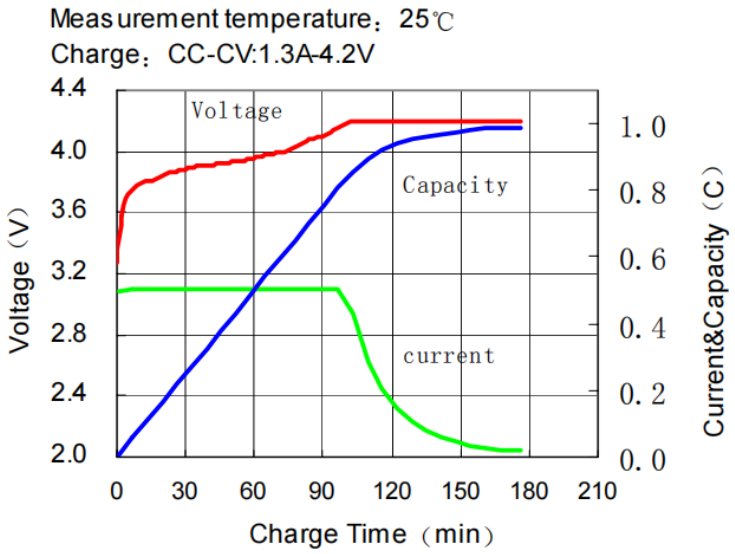

Rate Discharge Characteristics

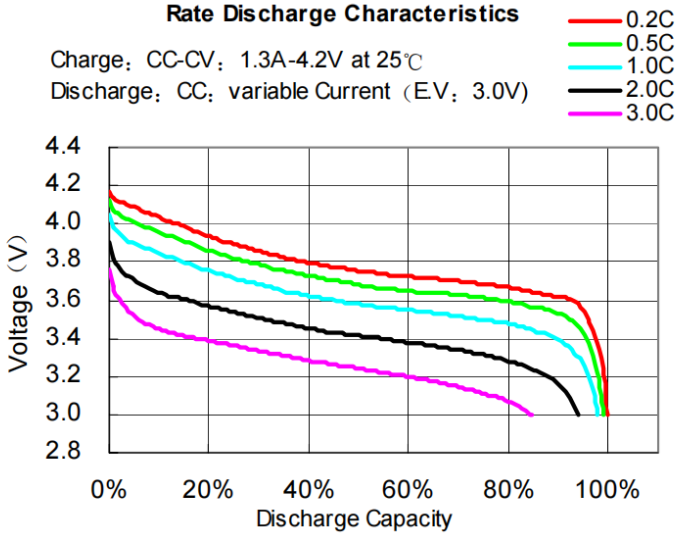

ANNOUNCEMENT

- ALWAYS immediately disconnect the charging cord from the wall outlet if batteries or equipment develop heat/smoke, unusual odors, or show evidence of bulging (changes in shape or geometry).
- Do not open the battery system or modules unless you have a risk assessment, training and permission.
- Never leave a battery unattended while charging. Only charge LiPo batteries with chargers specifically designed to charge LiPo batteries. NEVER use a NiMH or NiCd charger. Battery temperatures should not be allowed to fall below 32°F (0°C) or exceed 113°F (45°C) .
- Always consult the manufacturerGspecific battery manual for proper instructions.
- Avoid passive or active short-circuiting of the battery.
- If you plan not to use your LiPo cells for an extended period (more then 4 days) then use the "Storage" setting on your charger. If your charger does not have this feature then don't use it and invest in one that does.
- Avoid using chargers with long charging times.
- Avoid frequent shutdowns and restarts of the device on the way to using the battery.
- Never drop this type of battery, it will be deformed and we advise you never to try to charge a deformed battery as this may cause swelling, leakage and even fire.
- Stop using or charging the battery immediately if the battery becomes or appears damaged, gives off an odor, becomes discolored or deformed, starts to balloon or swell, leaks, exceeds a temperature of 160°F (71°C), or if any other abnormality is detected. Disconnect the battery and observe it in a safe area outside of any building or vehicle and away from any combustible materials. These abnormalities may cause the battery to leak, and the reaction with air may cause the chemical materials inside to ignite. Because delayed chemical reactions may occur (a battery can still ignite even after 10 minutes), you should continue observing the battery for at least 15 minutes as a safety precaution.

- ALWAYS use the correct battery and charger size and type that is specified for the device.