3.7V Lithium Polymer Battery Data Sheet

Model: 304583

Please Find More:

https://www.fpbattery.com/3-7v-1100mah-lithium-polymer-battery/

File Number: A/FP4583-17399

File Version: 01

CONTACT

CUSTOMER SERVICE
86.755.3682.7358
sales@fpbattery.com
Hours of Operation:
9:00am-6:00pm CST, Monday to Friday

LEARN MORE ON:
https://www.fpbattery.com/

DNK POWER COMPANY LIMITED

BATTERY SPECIFICATION

Part Number	DNK 304583
Nominal Voltage	3.7 V
Nominal Capacity	1100 mAh
Internal Impedence	<60mΩ
Charge Voltage	4.2V
Recommended Charge Current	0.2 C
Allowed Max Charge Current	0.5 C
Output Voltage Range	4.2 - 2.5 V
Recommended Discharge Current	0.2 C
Max Continuous Discharge Current	1 C
Pulse Discharge Current	3 C (10 mS)
Discharge Cut-off Voltage	2.5± 0.05V
Cycle Life to 80% Health	500 (0.2C, 25°C)

1

1 YEAR WARRANTY

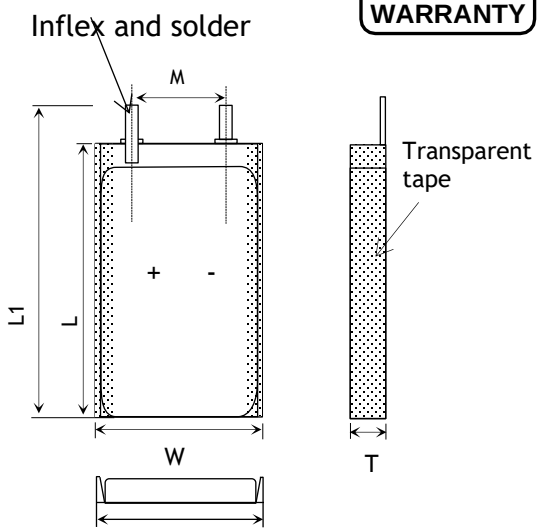

Item	Parameter (mm)
T	3
W	45
M	10
L	83
L_1	85
BL	85 ± 1
CL	100

ENVIRONMENTAL SPECIFICATIONS

Charging Temperature Range	0 - 45°C
Discharging Temperature Range	-20 - 60°C
Storage Period 1 Week	-20 - 45°C
Storage Period 1 Month	-10 - 45°C
Storage Period 6 Months	0 - 35°C

BATTERY PROTECTION

Over Charge	4.275 ± 50mV
Over Discharge	2.5V ± 50mV
Over Current	3A to 5A
Short Circuit	Yes

MECHANICAL SPECIFICATIONS

Dimensions	85x 45 x 3 mm(L*W*T)
Weight	18 g
Battery Terminals	WC/ FL *

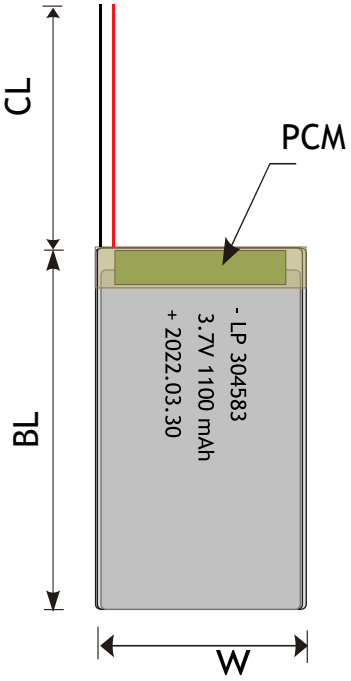

CERTIFICATION

Certification Approval	PLEASE CONSULT SALES

* WC=With Connector FL=Flying Leads UWP=Blue Wrapped PVC BWP=Black Wrapped PVC BC= Bare Cell

BULK PRODUCTION ACTUAL PICTURES



BARE CELL (BC)



FLYING LEADS (FL)



WITH CONNECTOR (WC)



BLUE WRAPPED PVC (UWP)



BLACK WRAPPED PVC (BWP)

3.7V LIPO BATTERY OPTIONS



Special Ingredients to make batteries work from -40 -85 ° C



Discharging Current up to 100C



Popular JST,Molex,Hirose,Anderson available



LED Power Indicator



Power Button



Upgrade to LifePo4 tech and life circle up to 1500

RELATIVE CURVES

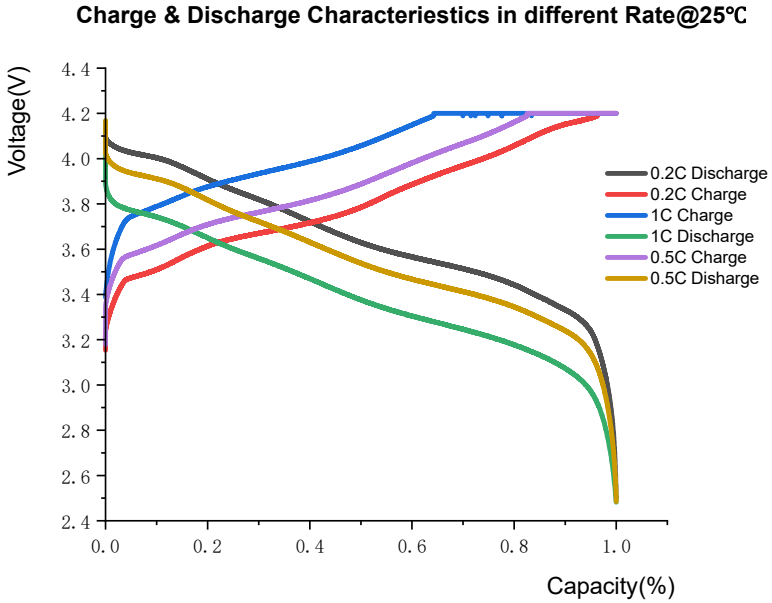

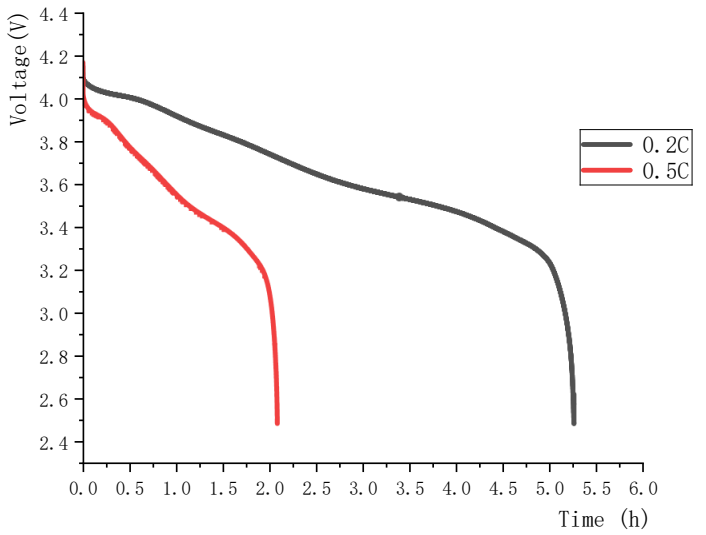

ANNOUNCEMENT

- If any of the individual cells become warm/hot compared to the other cells, disconnect it immediately and either cover it with a fire blanket, or put it in a non-conductive container and place it outside away from all flammable objects for at least 30 minutes as chemical reactions can take this long before a fire starts.
- Test equipment for short circuits prior to installing batteries.
- Do not short the wires of your LiPo battery. This is very dangerous and can cause a fire or even an explosion. If you accidentally short the wires of your LiPo battery, either cover it with a fire blanket, or put it in a non-conductive fire-proof container and place it outside away from all flammable objects for at least 30 minutes as chemical reactions can take this long before a fire starts.
- Security or other responsible staff on site who may be called to take action in an emergency should be made aware of the location of the charging area, the means for isolating the power and the action to take in an emergency.
- Avoid prolonged use of higher power devices.
- Only authorized personnel may ship lithium batteries. Contact EHRS if there is a need to ship batteries.
- If the battery develops an abnormal condition, stop using it immediately.
- Charging current should be less than maximum charge current specified in the Product Specification.
- Do not leave unattended when charging
- Do not inhale the gasses of a damaged battery or ingest the contents. If you do accidentally swallow the contents of LiPo cells seek medical attention

immediately.

- Do not short the wires of your LiPo battery. This is very dangerous and can cause a fire or even an explosion. If you accidentally short the wires of your LiPo battery, either cover it with a fire blanket, or put it in a non-conductive fire-proof container and place it outside away from all flammable objects for at least 30 minutes as chemical reactions can take this long before a fire starts.