3.7V Lithium Polymer Battery Data Sheet

Model: 304382

Please Find More:

https://www.fpbattery.com/3-7v-1000mah-lithium-polymer-battery/

File Number: A/FP4382-18162

File Version: 01

CONTACT

CUSTOMER SERVICE
86.755.3682.7358
sales@fpbattery.com
Hours of Operation:
9:00am-6:00pm CST, Monday to Friday

LEARN MORE ON:
https://www.fpbattery.com/

DNK POWER COMPANY LIMITED

BATTERY SPECIFICATION

Part Number	DNK 304382
Nominal Voltage	3.7 V
Nominal Capacity	1060 mAh
Internal Impedence	<60mΩ
Charge Voltage	4.2V
Recommended Charge Current	0.2 C
Allowed Max Charge Current	0.5 C
Output Voltage Range	4.2 - 2.5 V
Recommended Discharge Current	0.2 C
Max Continuous Discharge Current	1 C
Pulse Discharge Current	3 C (10 mS)
Discharge Cut-off Voltage	2.5± 0.05V
Cycle Life to 80% Health	500 (0.2C, 25°C)

1

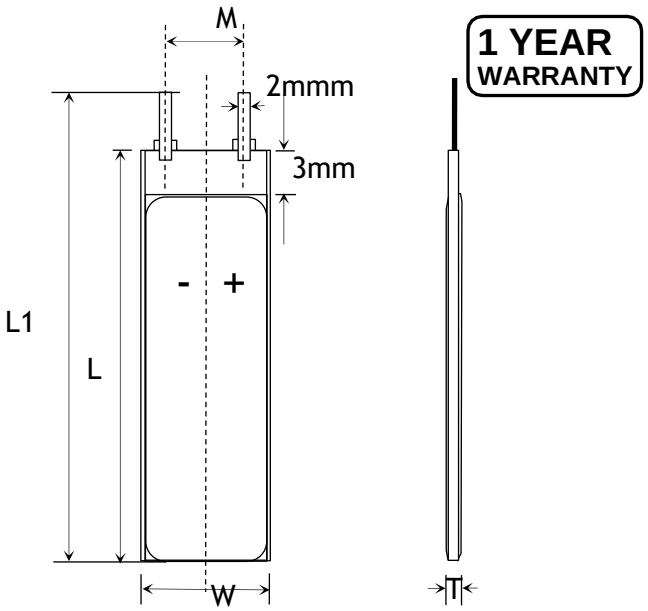

Item	Parameter (mm)
T	3
W	43
M	10
L	82
L_1	84
BL	84 ± 1
CL	100

ENVIRONMENTAL SPECIFICATIONS

Charging Temperature Range	0 - 45°C
Discharging Temperature Range	-20 - 60°C
Storage Period 1 Week	-20 - 45°C
Storage Period 1 Month	-10 - 45°C
Storage Period 6 Months	0 - 35°C

BATTERY PROTECTION

Over Charge	4.275 ± 50mV
Over Discharge	2.5V ± 50mV
Over Current	3A to 5A
Short Circuit	Yes

MECHANICAL SPECIFICATIONS

Dimensions	84x 43 x 3 mm(L*W*T)
Weight	Around 17 g
Battery Terminals	WC/ FL *

CERTIFICATION

Certification Approval	PLEASE CONSULT SALES

* WC=With Connector FL=Flying Leads UWP=Blue Wrapped PVC
BWP=Black Wrapped PVC BC= Bare Cell

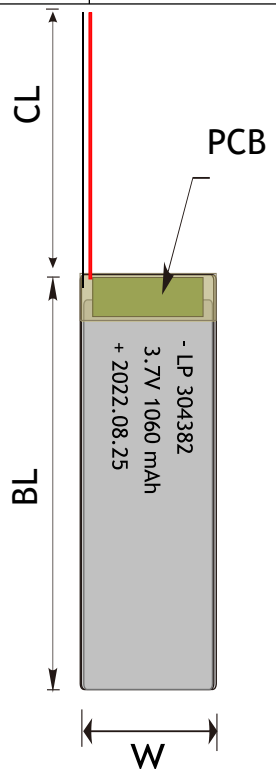

RELATIVE CURVES

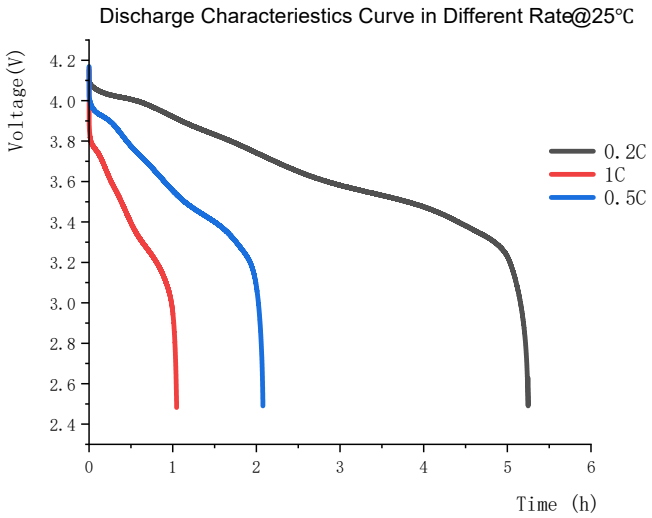

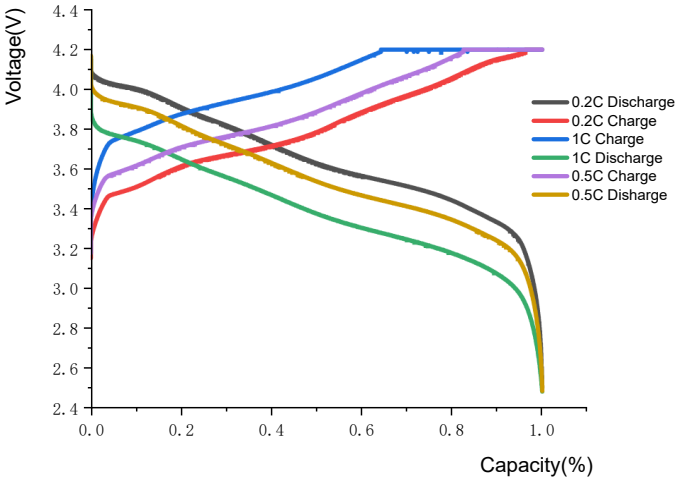

ANNOUNCEMENT

- Set up emergency battery isolation container.
- ALWAYS use the charging cord supplied with the device (or only use a replacement charging cord that is specified by the device manufacturer to bean approved alternative).
- Avoid changing the battery frequently during use.
- Do not touch the battery to materials that are easily conductive.
- Check and double check that you have set the correct voltage/number of cells and the maximum current does not exceed the stated charge rate (normally 1C). If using an automatic charger, check that it has detected the correct number of cells. Check it again through every stage of charging.
- Do not store the battery in direct sunlight.
- If the battery develops an abnormal condition, stop using it immediately.
- Avoid dropping batteries, dropping Lipos can cause the battery cell to crush causing an internal short which may lead to fire.
- Do not charge the battery without supervision.
- Only charge in an isolated area away from other flammable materials and on a non conductive and non flammable surface. Use a fireproof container. LiPo battery fires can not be extinguished. If a fire occurs, contain it by covering it with a fire blanket until it burns itself out.
- Protect from the frost, and also temperatures above 60 degrees Centigrade. Batteries should never be in the sun, on hot surfaces.